MASON COUNTY COMMUNITY SERVICES

Building, Planning, Environmental Health, Community Health

2018 International Residential Code for single-story decks.

The 2018 International Residential Code Section R507 contains additional information and details specific to deck construction.

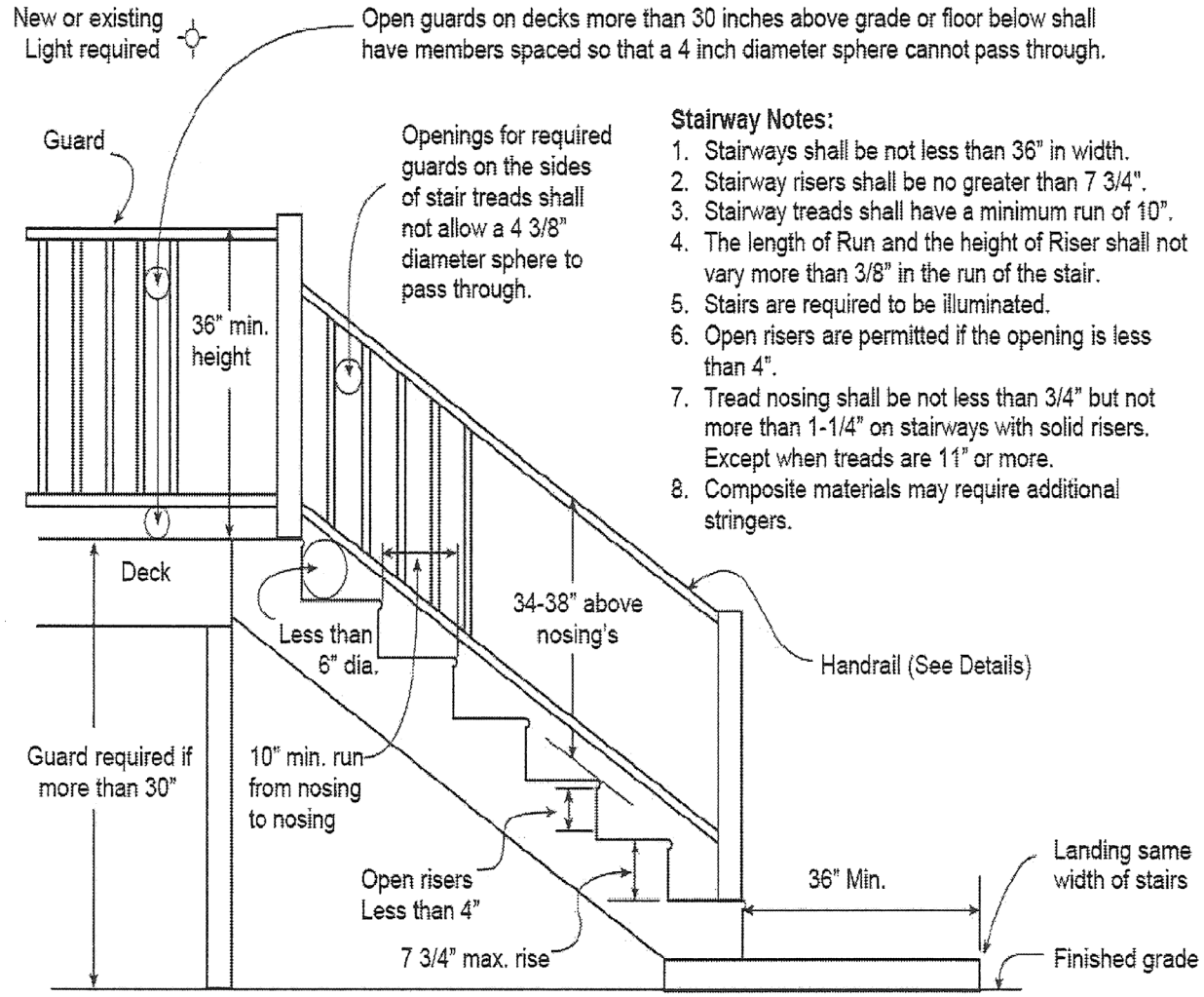

Stairway Notes:

1. Stairways shall be not less than 36" in width.
2. Stairway risers shall be no greater than 7 3/4".
3. Stairway treads shall have a minimum run of 10".
4. The length of Run and the height of Riser shall not vary more than 3/8" in the run of the stair.
5. Stairs are required to be illuminated.
6. Open risers are permitted if the opening is less than 4".
7. Tread nosing shall be not less than 3/4" but not more than 1-1/4" on stairways with solid risers. Except when treads are 11" or more.
8. Composite materials may require additional stringers.

Deck Footing Size Requirements
Table R507.3.1

Live or Ground Snow Load (psf)	Tributary Area (sq. ft.)	Soil bearing Capacity		
		1500 psf		
		Side of a square footing (Inches)	Diameter of a round footing (inches)	Thickness (Inches)
60 Live or 70 Ground Snow Load	5	7	8	6
	20	12	14	6
	40	18	20	6
	60	21	24	8
	80	25	28	9
	100	28	31	11
	120	30	34	12
	140	33	37	13
	160	35	40	15

a. Interpolation permitted, extrapolation not permitted.
b. Reserved.
c. Footing dimensions shall allow complete bearing of the post.
d. If the support is a brick or CMU pier, the footing shall have a minimum 2-inch projection on all sides.
e. Area, in square feet, of deck surface supported by post and footings.
f. Minimum thickness shall only apply to plain concrete footings,

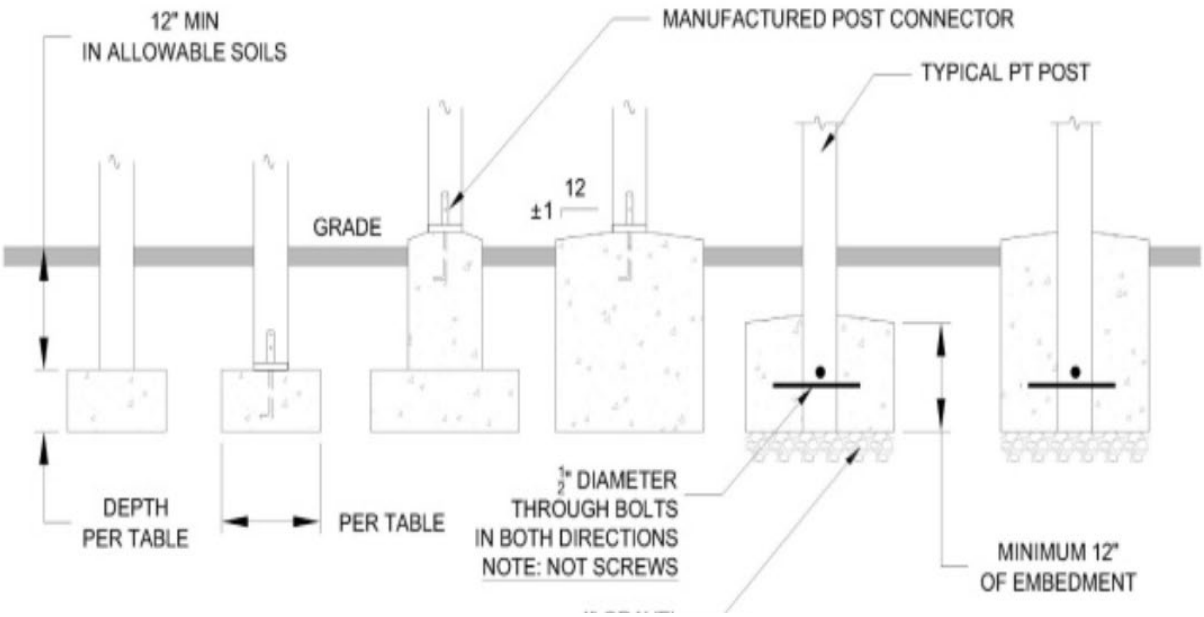

Code Requirement	Code Reference
All wood must be pressure treated or of natural resistance to decay.	IRC R317.1
Fasteners, hangers, nails, etc., must be stainless steel, hot-dipped galvanized, or as specifically required for the specified wood preservative used.	IRC R317.3.1
Lateral connection is required to resist overturning	IRC R507.5.1
Ledger boards must be attached with structural wood screws to the building and all connections between the deck and dwelling must be flashed with metal flashing. Hold-down tension ties shall be installed in not less than 2 locations.	IRC R507.2 IRC R507.2.4
Joists are of appropriate size to support imposed loads. The span of a joist is measured from the centerline of bearing at one end of the joist to the centerline of bearing at the other end of the joist and does not include length of the overhangs. Use Table 1 to determine joist span based on lumber size and joist spacing.	IRC R507.5
All decks, balconies or porches, open sides of landings and stairs which are more than 30" above grade or a floor below must be protected by a guardrail not less than 36" high (42" for commercial or common areas of multi-family dwellings). Open guardrails and stair railings require intermediate rails or an ornamental pattern such that a ball 4" in diameter cannot pass through.	IRC R312
Footings are of appropriate size to support imposed loads and extend a minimum of 12" below grade. See Table 1 for footing sizes.	IRC 403.1.4
Columns and posts exposed to the weather or to water splash must be supported by and connected to concrete piers or metal pedestals projecting above grade. Columns and posts in contact with the ground or embedded in concrete or masonry must be of special pressure treated wood approved for ground contact.	IRC R317.1.2 IRC R317.1.4
Positive connections required to secure posts to beams.	IRC R507.7.1
Decks should not overhang beams by more than ¼ the actual adjacent span, nor should beams overhang posts by more than ¼ the actual beam span at the ends unless a specific design is calculated. Floor joist spacing at 24" on center requires 2x decking, and floor joist spacing at 16" on center requires 1 ¼ actual thickness.	IRC R507.5 IRC R507.6 IRC R507.4
Deck stairs (exterior stairways) shall be provided with a source of illumination at the top landing, controlled from within the dwelling or by automatic means.	IRC R303.8

Typical Handrail Elevation- IRC Section 311.7.8

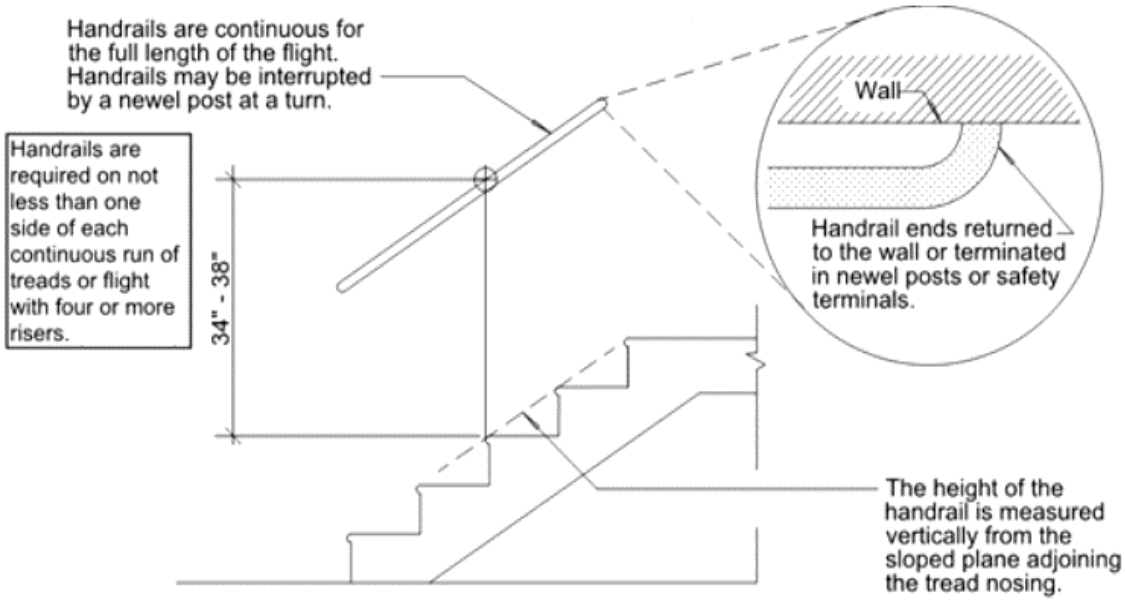

TABLE R507.4 DECK POST HEIGHT

Loads[b] (psf)	Post Species[c]	Post Size[d]	Maximum Deck Post Height[a] (feet-inches)							
			Tributary Area[g,h] (sq. ft.)							
			20	40	60	80	100	120	140	160
60 Live Load, ≤60 Ground Snow Load	Douglas Fir[e], Hem-fir[e], SPF[e]	4 x 4	14-0	10-10	8-7	7-0	5-8	4-1	NP	NP
		4 x 6	14-0	13-10	11-1	9-5	8-2	7-3	6-4	5-4
		6 x 6	14-0	14-0	14-0	14-0	14-0	13-3	10-9	6-11
		8 x 8	14-0	14-0	14-0	14-0	14-0	14-0	14-0	14-0
	Redwood[f], Western Cedars[f], Ponderosa Pine[f], Red Pine[f]	4 x 4	14-0	10-3	7-0	NP	NP	NP	NP	NP
		4 x 6	14-0	13-6	10-6	8-4	5-10	NP	NP	NP
		6 x 6	14-0	14-0	14-0	14-0	11-11	NP	NP	NP
		8 x 8	14-0	14-0	14-0	14-0	14-0	14-0	14-0	14-0

For SI: 1 inch = 25.4 mm, 1 square foot = 0.0929 m^2, 1 pound per square foot = 0.0479 kPa, NP = Not permitted.

a. Measured from the underside of the beam to top of footing or pier.
b. 10 psf dead load. Snow load not assumed to be concurrent with live load.
c. No. 2 grade, wet service factor included.
d. Notched deck posts shall be sized to accommodate beam size per in accordance with Section R507.5.2.
e. Includes incising factor.
f. Incising factor not included.
g. Area, in square feet, of deck surface supported by post and footing.
h. Interpolation permitted. Extrapolation not permitted.

Deck Ledger Attachment Details & Specifications

- ❑ Lag screws and bolts shall be staggered per diagram below.
- ❑ Lag screw tips shall extend beyond the inside face of the band/rim joist.
- ❑ Maximum gap between band/rim joist and ledger shall be ½" with spacer(s)
- ❑ Flashing shall be installed to prevent water intrusion at structural attachment.
- ❑ Deck Ledger shall be minimum 2"x 8" pressure preservative treated, No. 2 grade lumber. (IRC Section R507.9.1.1)
- ❑ Deck ledger shall not be supported on stone or masonry veneer.

TABLE R507.9.1.3(1) DECK LEDGER CONNECTION TO BAND JOIST

Load[c] (psf)	Joist Span[a] (feet)	On-Center Spacing of Fasteners[b] (inches)		
		1/2-inch diameter lag screw with 1/2-inch maximum sheathing[d,e]	1/2-inch diameter bolt with 1/2-inch maximum sheathing[e]	1/2-inch diameter bolt with 1-inch maximum sheathing[f]
60 Live Load or 70 Ground Snow Load	6	22	36	35
	8	16	31	26
	10	13	25	21
	12	11	20	17
	14	9	17	15
	16	8	15	13
	18	7	13	11

For SI: 1 inch = 25.4 mm, 1 foot = 304.8 mm, 1 pound per square foot = 0.0479 kPa.

a. Interpolation permitted. Extrapolation is not permitted.

b. Ledgers shall be flashed in accordance with Section R703.4 to prevent water from contacting the house band joist.
c. Dead load = 10 psf. Snow load shall not be assumed to act concurrently with live load.
d. The tip of the lag screw shall fully extend beyond the inside face of the band joist.
e. Sheathing shall be wood structural panel or solid sawn lumber.
f. Sheathing shall be permitted to be wood structural panel, gypsum board, fiberboard, lumber or foam sheathing. Up to 1/2-inch thickness of stacked washers shall be permitted to substitute for up to 1/2 inch of allowable sheathing thickness where combined with wood structural panel or lumber sheathing.

TABLE R507.9.1.3(2)
PLACEMENT OF LAG SCREWS AND BOLTS IN DECK LEDGERS AND BAND JOISTS

Minimum End and Edge Distances and Spacing Between Rows				
	Top Edge	**Bottom Edge**	**Ends**	**Row Spacing**
Ledger[a]	2 inches[d]	¾ inch	2 inches[b]	1 5/8 inches[b]
Band Joist[c]	¾ inch	2 inches[e]	2 inches[b]	1 5/8 inches[b]

For SI: 1 inch = 25.4 mm

a. Lag screws or bolts shall be staggered from the top to the bottom along the horizontal run of the deck ledger in accordance with Figure R507.9.1.3(1).
b. Maximum 5 inches.
c. For engineered rim joists, the manufacturer's recommendations shall govern.
d. The minimum distance from bottom row of lag screws to the top edge of the ledger shall be in accordance with Figure R507.9.1.3(1).
e. The 2 inches may be reduced to ¾ inch when the band joist is directly supported by a mudsill, a header or by double top wall plates.

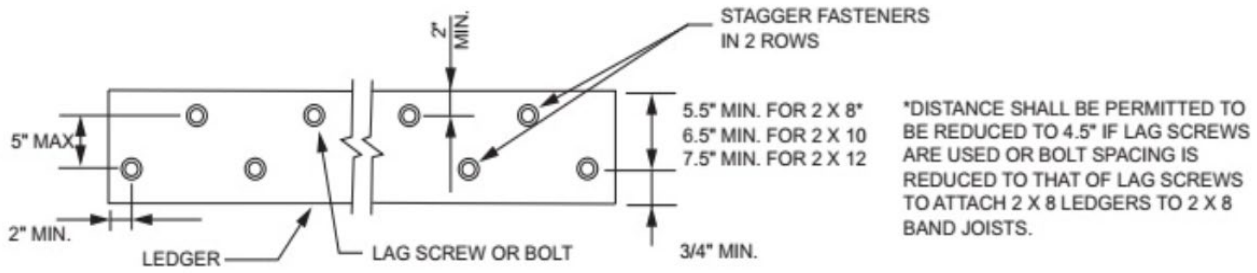

FIGURE R507.9.1.3(1)PLACEMENT OF LAG SCREWS AND BOLTS IN LEDGERS

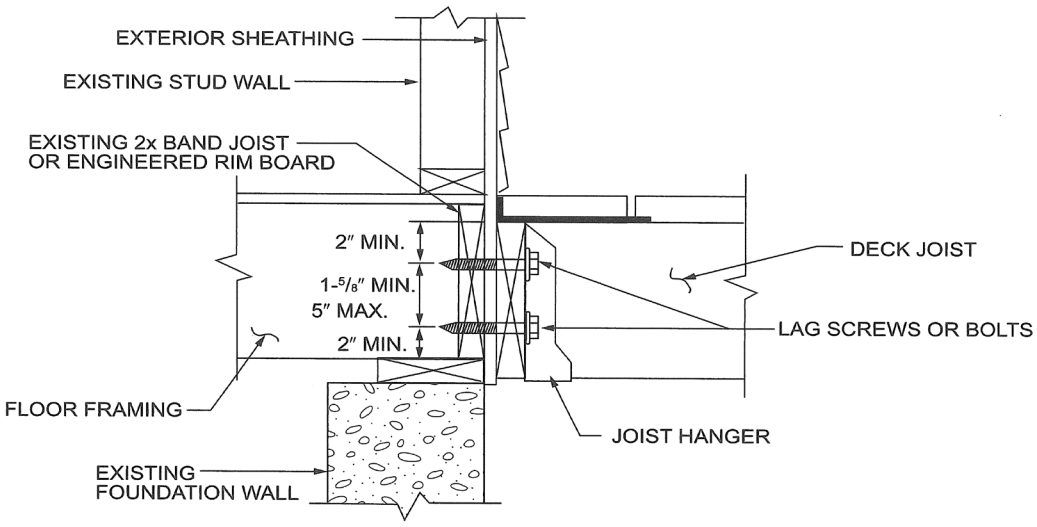

Deck Attachment for Lateral Loads
FIGURE R507.9.2(1) and FIGURE R507.9.2(2)

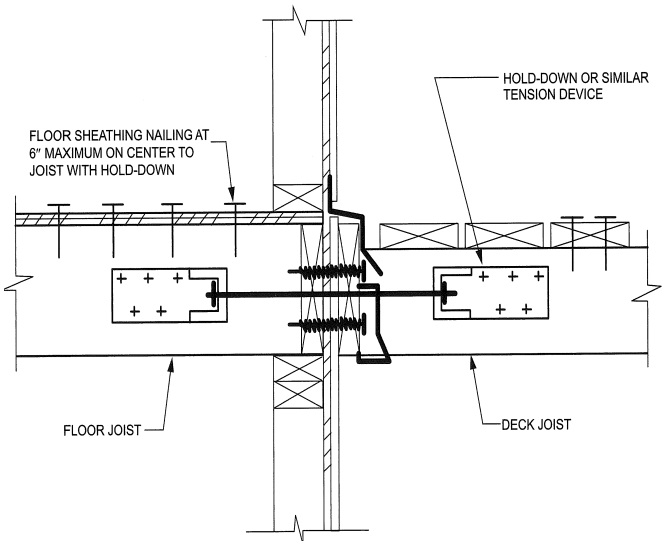

Hold down tension devices shall be installed in not less than two locations per deck, within 24 inches of end of the deck. Each device shall have an allowable stress design capacity of not less than 1,500 pounds.

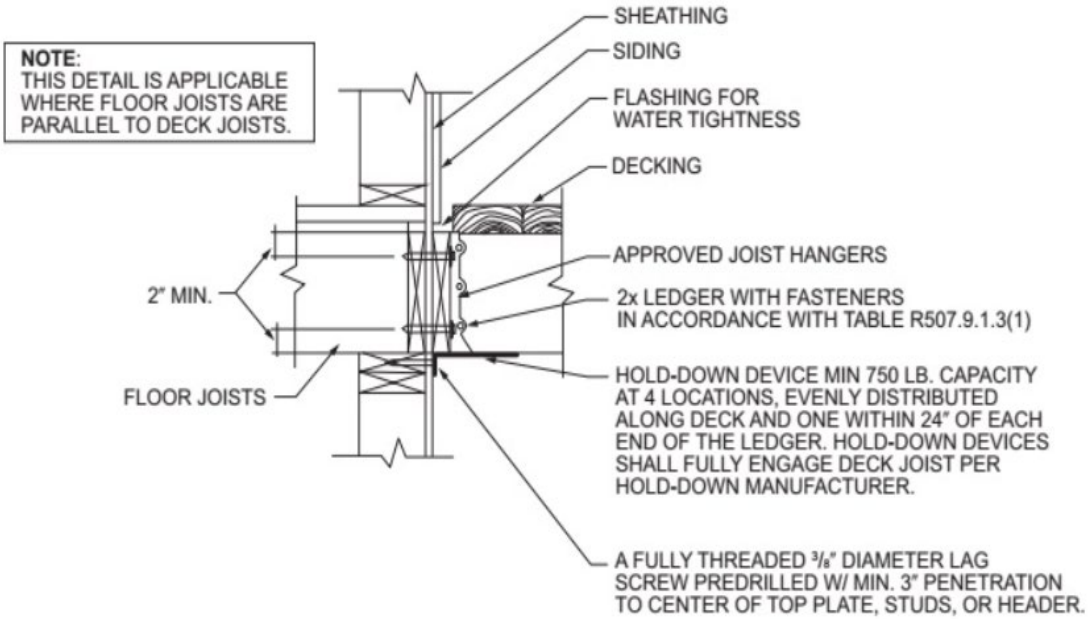

R507.9.2 Deck lateral load connections. Lateral loads shall be transferred to the ground or to a structure capable of transmitting them to the ground. Where the lateral load connection is provided in accordance with Figure R507.9.2(1), hold-down tension devices shall be installed in not less than two locations per deck, within 24 inches of each end of the deck. Each device shall have an allowable stress design capacity of not less than 1500 pounds (6672 N). Where the lateral load connections are provided in accordance with Figure R507.9.2(2), the hold-down tension devices shall be installed in not less than four locations per deck, and each device shall have an allowable stress design capacity of not less than 750 pounds (3336 N).

Exception: Decks not more than 30 inches above grade at any point may be unattached.

TABLE R507.5(2)
MAXIMUM DECK BEAM SPAN
60 PSF LIVE LOAD c

Beam Species[d]	Beam Size[e]	Deck Joist Span[a,i] (feet)						
		6	8	10	12	14	16	18
		Maximum Beam Span[a,b,f] (feet-inches)						
Douglas fir-larch[g], Spruce-pine-fir[g]	1-2×6	3-8	3-1	2-8	2-4	2-2	2-0	1-10
	1-2×8	5-0	4-1	3-6	3-1	2-10	2-7	2-5
	1-2×10	6-1	5-2	4-6	4-0	3-7	3-4	3-2
	1-2×12	7-1	6-1	5-5	4-10	4-5	4-1	3-10
	2-2×6	5-6	4-9	4-3	3-10	3-5	3-1	2-10
	2-2×8	7-5	6-5	5-9	5-0	4-6	4-1	3-9
	2-2×10	9-0	7-10	7-0	6-4	5-9	5-2	4-10
	2-2×12	10-6	9-1	8-1	7-5	6-10	6-4	5-10
	3-2×6	6-11	6-0	5-4	4-11	4-6	4-2	3-10
	3-2×8	9-3	8-0	7-2	6-6	6-1	5-6	5-0
	3-2×10	11-4	9-10	8-9	8-0	7-5	6-11	6-5
	3-2×12	13-2	11-5	10-2	9-4	8-7	8-1	7-7
Redwood[h], Western Cedars[h], Ponderosa Pine[h], Red Pine[h]	1-2×6	6-9	3-2	2-9	2-5	2-2	2-0	1-11
	1-2×8	4-10	4-2	3-7	3-2	2-11	2-8	2-6
	1-2×10	5-10	5-1	4-6	4-1	3-8	3-5	3-3
	1-2×12	6-10	5-11	5-3	4-10	4-5	4-2	3-11
	2-2×6	5-7	4-10	4-4	3-11	3-6	3-2	2-11
	2-2×8	7-1	6-2	5-6	5-0	4-7	4-2	3-10
	2-2×10	8-8	7-6	6-9	6-2	5-8	5-4	4-11
	2-2×12	10-1	8-9	7-10	7-2	6-7	6-2	5-10
	3-2×6	6-8	6-1	5-5	5-0	4-7	4-3	3-11
	3-2×8	8-9	7-9	6-11	6-4	5-10	5-5	5-2
	3-2×10	10-11	9-5	8-5	7-8	7-2	6-8	6-3
	3-2×12	12-8	10-11	9-9	8-11	8-3	7-9	7-3

For SI: 1 inch = 25.4 mm, 1 foot = 304.8 mm, 1 pound per square foot = 0.0479 kPa, 1 pound = 0.454 kg.

a. Interpolation permitted. Extrapolation not permitted.

b. Beams supporting a single span of joists with or without cantilever.

c. Dead load = 10 psf, L/Δ = 360 at main span, L/Δ = 180 at cantilever. Snow load not assumed to be concurrent with live load.

d. No. 2 grade, wet service factor included.

e. Beam depth shall be equal to or greater than the depth intersecting joist for a flush beam connection.

f. Beam cantilevers are limited to the adjacent beam's span divided by 4.

g. Includes incising factor.

h. Incising factor not included.

i. Deck joist span as shown in Figure R507.5.

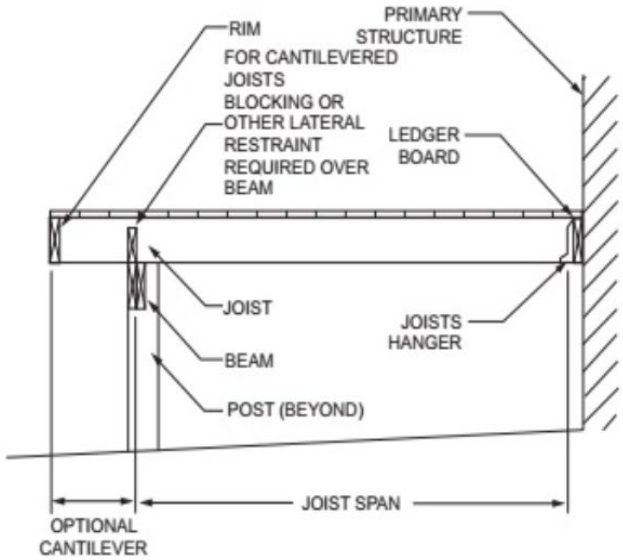

CANTILEVERED JOISTS WITH DROPPED BEAM

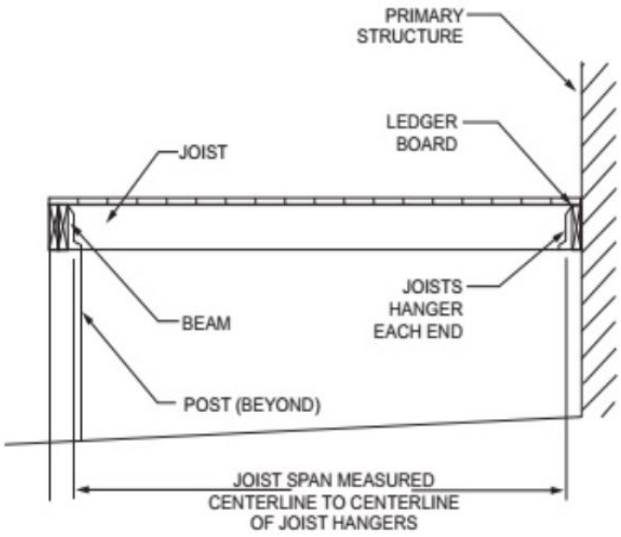

JOISTS WITH FLUSH BEAM

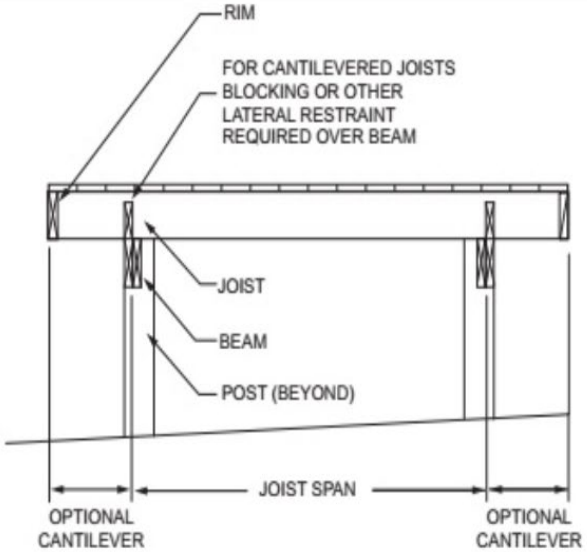

JOISTS ON FREE-STANDING DECK WITH DROPPED BEAM

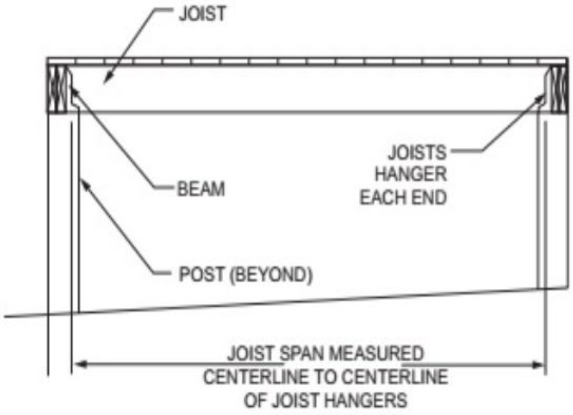

JOISTS ON FREE-STANDING DECK WITH FLUSH BEAM

DECKING MATERIAL TYPE AND NOMINAL SIZE	MAXIMUM ON-CENTER SPACING	
	Decking perpendicular to joist	Decking diagonal to joist(a)
1 ¼- inch-thick wood	16 inches	12 inches
2-inch-thick wood	24 inches	16 inches
Plastic composite	In accordance with Section R507.2	In accordance with Section R507.2

(a) Maximum angle of 45 degrees from perpendicular for wood deck boards.

TABLE R507.6
MAXIMUM DECK JOIST SPANS

Load[a] (psf)	Joist Species[b]	Joist Size	Allowable Joist Span[b,c] (feet-inches)			Maximum Cantilever[f,g] (feet-inches)							
			Joist Spacing (inches)			Adjacent Joist Back Span[g] (feet)							
			12	16	24	4	6	8	10	12	14	16	18
60 Live Load or 70 Ground Snow Load	Douglas fir-larch[e], Hem-fir[e], Spruce-pine-fir[e]	2×6	7-11	7-1	5-9	1-0	1-6	NP	NP	NP	NP	NP	NP
		2×8	10-5	9-5	7-8	1-0	1-6	2-0	2-1	NP	NP	NP	NP
		2×10	13-3	11-6	9-5	1-0	1-6	2-0	2-6	2-8	NP	NP	NP
		2×12	15-5	13-4	10-11	1-0	1-6	2-0	2-6	3-0	3-3	NP	NP
	Redwood[f], Western Cedars[f], Ponderosa Pine[f], Red Pine[f]	2×6	7-4	6-8	5-10	1-0	1-4	NP	NP	NP	NP	NP	NP
		2×8	9-8	8-10	7-4	1-0	1-6	1-11	NP	NP	NP	NP	NP
		2×10	12-4	11-0	9-0	1-0	1-6	2-0	2-6	2-6	NP	NP	NP
		2×12	14-9	12-9	10-5	1-0	1-6	2-0	2-6	3-0	3-0	NP	NP

For SI: 1 inch = 25.4 mm, 1 foot = 304.8 mm, 1 pound per square foot = 0.0479 kPa, 1 pound = 0.454 kg, NP = Not permitted.

a. Dead load = 10 psf dead load. Snow load not assumed to be concurrent with live load.
b. No. 2 grade, wet service factor included.
c. L/Δ = 360 at main span.
d. L/Δ = 180 at cantilever with 220-pound point load applied to end.
e. Includes incising factor.
f. Incising factr not included.
g. Interpolation permitted. Extrapolation not permitted.

SAFETY GLAZING:

Glazing where the bottom exposed edge of the glazing is less than 36 inches above the plane of the adjacent walking surface of stairways, landings between flights of stairs and ramps shall be considered a hazardous location. [IRC R308.4.6]
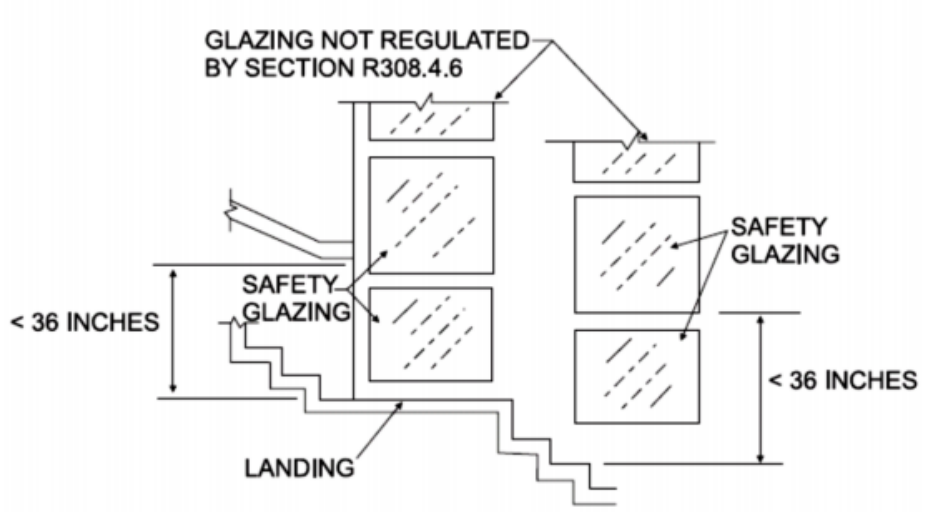
Glazing adjacent to the landing at the bottom of a stairway where the glazing is less than 36 inches above the landing and within a 60 inch arc measured from the bottom tread shall be considered a hazardous location. [IRC R308.4.7]