MASON COUNTY DEPARTMENT OF COMMUNITY SERVICES

615 W. Alder St., Shelton, WA 98584

www.co.mason.wa.us

- Building
- Planning
- Fire Marshal

Shelton: (360) 427-9670 ext . 352
Belfair: (360) 275-4467 ext. 352
Elma: (360) 482-6968 ext. 352
Fax: (360) 427-7798

PERMIT REQUIREMENTS

A complete, accurate, and detailed site plan is important to avoid delays in the review and approval of your project. The following items will be required for a complete the building permit application package. Additional information may be needed depending upon individual site conditions.

Requirements	Site Built Home	Manufactured Home	Man. Home Replacement	Addition or Remodel	Garage, Barn or Carport	Retaining Wall, Deck	Bulkhead or Dock, ●	Demolition of Structure	Mechanical or Plumbing	Re-Roof Structure	Commercial Projects
Building Permit Application Form	✔	✔	✔	✔	✔	✔	✔	✔		✔	✔
Plumbing/Mechanical Application Form	✔			✔	✔				✔		✔
Site Plan	1	1	1	1	1	1	1	1			1
Small Parcel Stormwater Application/Worksheet	✔	✔	✔	✔	✔	✔					✔
Energy Code Application Form	✔			✔	If Heated						✔
Engineered Calculations ◆ ☒	2			2	2	2	2				2
Construction Plans ☒	3			3	3	3	3				3
Floor Plan	✔	✔	✔	✔	✔						
Property Lines Flagged	✔	✔	✔	✔	✔	✔	✔	✔			✔
Geotechnical Study ◆ See instructions on back	2	2	2	2	2	2	2				2
Fire Apparatus Access Road	✔	✔	✔								✔
Road Access Permit	✔	✔	✔		✔	◆	◆				✔
SEPA ◆							✔				✔
PUBLIC HEALTH REQUIREMENTS											
Development Application Public Health	✔	✔	✔	✔	✔	✔			✔		✔
Septic Records	✔	✔	✔	✔	✔	✔					✔
Septic Permit Application & Septic Design	✔										
Water Adequacy Form	✔	✔	✔								✔
Septic Pumpers Report Existing systems older than 3 years.	✕	✕	✕	✕	✕				◆		✕

The number in the table indicates the number of copies required if applicable.

✔ Required for submittal of a complete application.

✕ A Pumpers report may be required when a septic system is existing and has been installed for three or more years. The report, dated within the last three years, shall include the size and condition of both tank and baffles.

● Additional information and permits may be required by the Planning Dept. call extension 352 for information.

◆ If applicable, needed when site conditions require additional information.

☒ Engineered plans shall have design information & details transferred onto plans. One copy of the plans and calculations shall be wet-stamped.

Revised 02.11.2016

SUBMITTAL SPECIFICATIONS AND INFORMATION

Site Plan: Site plans must be drawn to scale and at least 8 ½" x 11". Scale not less than 1"=60'. Checklist indicating information required on the site plan is listed on the site plan application. Incomplete site plans may cause a delay in the review and approval of your project.

Construction Plans: Plans must be drawn to scale, preferred ¼" = 1'. Dimensions must be noted on the plans. A complete set of plans shall include foundation plan, framing plans, floor plans, cross sections, and elevations. A complete building plan will give the building department enough information on how you plan to construct your project. If you plan to construct a log home, pole building greater than 864 square feet, or a metal, masonry, or concrete structure, calculations and plans, stamped by a Washington State licensed engineer may be required. The building official may require additional drawings, details, sections, or stamped-engineered calculations and/or details.

Directions to Site: Provide accurate directions to your project site. This information will be used by staff when they review the project and by building inspectors

Structural Engineered Calculations: Will be required if the proposed structure does not meet conventional construction standards. Include 2 sets of calculations with your permit application.

Driveway Access Permit: May be required if accessing a public road or right of way. Contact Mason County Public Works at (360) 427-9670, ext. 450

Washington State Energy Code: WSEC Energy envelope calculations and air quality compliance.

Existing On-Site Sewage System: Documentation of approved on-site sewage system and satisfactory operation and maintaince report within last 3 years.

Septic Approval or Sewer Permit: Septic design application must be approved by the Mason County Public Health prior to permit issuance for all development with septic systems. If sewer is available, sewer permits can be obtained by calling Mason County Utilities.

Water Availability: The water system manager must complete a Water Adequacy application if the project will be connected to a public/community water system. Private wells systems require a water well report, or capacity test, and bacteriological test within last 12 months.

RLC/Pre-Inspection: Pre- site inspection may be necessary for application. A site visit completed by a planner to identify critical areas and setback on the site.

Aquifer Recharge Areas: Areas where water infiltrates the soil, and percolates through it and surface rocks, to the groundwater table. These areas are mapped with Mason County Community Development.

Critical Area: Critical areas include shorelines, flood plains, streams, wetlands, important wildlife habitat areas and landslide hazard areas (such as steep slopes and marine bluffs). The planner may need to visit your site to decide whether a buffer zone is required between the critical area and the proposed structures. Please mark the corners of the proposed structure with flags or stakes.

Geotechnical Study: A geotechnical assessment or report will be required if the development is within 300 ft of a slope 14% or greater. Additionally if the parcel is located within a mapped Landslide/Erosion Hazard Area

Wetland: Areas that are inundated or saturated by surface water or ground water at a frequency and duration sufficient to support, and that under normal circumstances do support a prevalence of vegetation typically adapted for life in saturated soil conditions. Wetlands generally include swamps, marshes, bogs, and similar areas.

Buffer: An area of land or designated for the purpose of insulating or separating a structure or land use from a critical area or resource land in such a manner as to reduce or mitigate any adverse impacts of the developed area.

Parcel Number: a 12-digit tax assessment number assigned to each parcel by the Assessor's Office.

Legal Description: This describes the parcel of land identified by the 12-digit tax identification number. It is acceptable to submit a legal description of the parcel as it appears on deeds, real estate contracts, and statutory warranty deed, or in records at the Assessor's office. Legal descriptions are used to check the dimensions of a parcel and any underlying restrictions (such as setbacks from property lines or easements, lot coverage, or height of buildings).

Address: Site addresses are assigned through the Mason County Department of Community Development; call (360) 427-9670 ext. 352 for more information.

Contractor Registration Number: Contractors must be licensed with the state. The contractor license number can be obtained from the general contractor that will be performing the work or through the Labor & Industries website at: https://wws2.wa.gov/lni/bbip/contractor.asp an owner can be an owner-contractor when building on his or her own property.

SEPA: The State Environmental Policy Act, 43.21c RCW and implementing State and County administrative rules

MASON COUNTY COMMUNITY SERVICES
PERMIT ASSISTANCE CENTER:
• BUILDING • PLANNING • PUBLIC HEALTH • FIRE MARSHAL
615 W. Alder Street, Shelton, WA 98584
Phone Shelton: (360)427-9670 ext. 352 • Fax: (360)427-7798 Phone
Belfair: (360)275-4467 • Phone Elma: (360)482-5269

Permit No:_____

BUILDING PERMIT APPLICATION

PROPERTY OWNER INFORMATION:

NAME:_____
MAILING ADDRESS:_____
CITY:_____ STATE:_____ ZIP:_____
PHONE #1:_____
PHONE #2:_____
EMAIL:_____

CONTRACTOR INFORMATION:

NAME:_____
MAILING ADDRESS:_____
CITY:_____ STATE:_____ ZIP:_____
PHONE:_____ CELL: _____
EMAIL :_____
L&I REG #_____ EXP. ___/___/___

PRIMARY CONTACT:

OWNER ☐ **CONTRACTOR** ☐ **OTHER** ☐

NAME _____ EMAIL _____
MAILING ADDRESS _____ CITY _____ STATE _____ ZIP_____
PHONE _____ CELL _____

PARCEL INFORMATION:

PARCEL NUMBER (12 Digit Number) _____ ZONING_____
LEGAL DESCRIPTION (Abbreviated) _____ FIRE DISTRICT_____
SITE ADDRESS_____CITY_____
DIRECTIONS TO SITE ADDRESS _____
_____

IS THE PROJECT WITHIN 300 FT OF SLOPE(S) **GREATER THAN 14%:** YES☐ NO ☐
IS PROPERTY WITHIN 200 FT OF THE FOLLOWING: *(Check all that apply)*:
SALTWATER ☐ LAKE ☐ RIVER/CREEK ☐ POND ☐ WETLAND ☐ SEASONAL RUNOFF ☐ STREAM ☐

TYPE OF WORK:

NEW ☐ ADDITION ☐ ALTERATION ☐ REPAIR ☐ OTHER ☐_____

USE OF STRUCTURE *(Residence, Garage, Commercial Bldg, Etc.)*_____
IS USE: PRIMARY ☐ SEASONAL ☐ NUMBER OF BEDROOMS_____ NUMBER OF BATHROOMS_____
HEATED STRUCTURE? YES *(Whole Bldg)* ☐ YES *(Part[s] of Bldg)* ☐ NO ☐
DESCRIBE WORK_____

SQUARE FOOTAGE: *(propose + existing)*

1ST FLOOR_____ sq. ft. 2ND FLOOR_____ sq. ft. 3RD FLOOR_____ sq. ft. BASEMENT_____ sq. ft.
DECK_____ sq. ft. COVERED DECK_____ sq. ft. STORAGE_____ sq. ft. OTHER_____ sq. ft.
GARAGE_____ sq. ft. *Attached* ☐ *Detached* ☐ CARPORT_____ sq. ft. *Attached* ☐ *Detached* ☐

MANUFACTURED HOME INFORMATION:

4 COPIES OF THE FLOOR PLAN REQUIRED

MAKE_____ MODEL_____ YEAR_____ LENGTH_____
WIDTH_____ BEDROOMS_____ BATHS_____ SERIAL NUMBER_____

ENVIRONMENTAL HEALTH:

SEWAGE/SEWER SOURCE: SEPTIC ☐ SEWER ☐ / NEW ☐ EXISTING ☐
PLUMBING IN STRUCTURE? YES ☐ NO ☐ *If yes, attach completed Water Adequacy Form*
PERIMETER/FOUNDATION DRAINS PROPOSED? YES ☐ NO☐ EXISTING SQ. FT. _____
EXISTING BEDROOMS _____ PROPOSED BEDROOMS _____ TOTAL BEDROOMS _____

OWNER acknowledges that submission of inaccurate information may result in a stop work order or permit revocation. Acknowledgement of such is by signature below. I declare that I am the owner and I further declare that I am entitled to receive this permit and to do the work as proposed. I have obtained permission from all the necessary parties, including any easement holder or parties of interest regarding this project. The owner or legal representative, represents that the information provided is accurate and grants employees of Mason County access to the above described property and structure(s) for review and inspection. This permit/application becomes null & void if work or authorized construction is not commenced within 180 days or if construction work is suspended for a period of 180 days.

PROOF OF CONTINUATION OF WORK ON THIS PERMIT IS BY MEANS OF INSPECTION. INACTIVITY OF THIS PERMIT APPLICATION OF 180 DAYS OF MORE WILL CAUSE THE APPLICATION TO BE EXPIRED. (MASON COUNTY CODE 14.08.42)

X_____ _____
Signature of **OWNER** (**Must be signed by the OWNER**) Date

DEPARTMENTAL REVIEW	APPROVED	DATE	DENIED	DATE	TAGS/NOTES/CONDITIONS
BUILDING DEPARTMENT					
PLANNING DEPARTMENT					
FIRE MARSHAL					
PUBLIC HEALTH					

FEE'S		**TOTAL VALUATION:**	
BUILDING PERMIT FEE		FIRE ACCESS AND GRADE	
PLAN REVIEW		GEO- TECH REVIEW	
PLUMBING & BASE FEE		STORMWATER REVIEW	
MECHANICAL & BASE FEE		**TOTAL FEES**	
WOOD/GAS/PELLET STOVE		VIOLATION INVESTIGATION FEE	
PLANNING REVIEW FEE		VIOLATION FEE	

SITE PLAN CHECKLIST

A COMPLETE, ACCURATE AND DETAILED SITE PLAN IS IMPORTANT TO AVOID DELAYS IN THE REVIEW AND APPROVAL OF YOUR PROJECT. USE THE CHECKLIST BELOW AS A TOOL TO HELP YOU COMPLETE THE SITE PLAN.

	Scale: A scale of 1”=20’, is typical but other scales such as 1”=10’ or 1”-40’ are also acceptable. Do not exceed 1”=60
	North arrow
	Property line location and dimensions.
	Label abutting streets
	Shoreline/Surface water: Indicate creeks, streams, lakes, ponds, wetlands and other bodies of water within 300 ft of the proposed project
	Wetlands and Seasonal Drainage: Show setback distances from wetlands or seasonal drainage.
	Easements: Indicate location and size of road, utility, and private easements.
	Show All Existing Development: Identify existing and proposed structures. Include porches, decks, roof overhangs, cantilevers, and structures that will be demolished.
	Proposed Building Footprint: Use scale to show distances to property lines, existing structures, septic tank and drainfield. **Stake or flag footprint of proposed structure.**
	Sewage Disposal System: Identify septic tank location and drainfield.
	Existing/proposed Buffers: Include open space, fences, sidewalks and parking areas.
	Retaining walls: Proposed and existing.
	Slopes/Site contours (Topography): Identify any slopes greater than 15%, fills or cuts greater than 4ft. that are located within 300 ft of the proposed project. Use Contour lines or arrows to show the direction of the slope
	Wells: Show existing/ proposed.
	Waterfront projects: Show all structures on adjacent property.
	Driveway/ Site Access
	Stormwater Run-off Path: Identify stormwater path and direction of flow.

TOPOGRAPHY PROFILE:

Building Permit number: _____ Owner/Applicant: _____ Parcel Number: _____	Direction:	Scale: Date of application:	Approval: *for office use* Building: _____ Planning: _____ Env. Health: _____

SUBMITTAL SPECIFICATIONS AND INFORMATION

Site Plan: Site plans must be drawn to scale and at least 8 ½" x 11". Scale not less than 1"=60'. Checklist indicating information required on the site plan is listed on the site plan application. Incomplete site plans may cause a delay in the review and approval of your project.

Construction Plans: Plans must be drawn to scale, preferred ¼" = 1'. Dimensions must be noted on the plans. A complete set of plans shall include foundation plan, framing plans, floor plans, cross sections, and elevations. A complete building plan will give the building department enough information on how you plan to construct your project. If you plan to construct a log home, pole building greater than 864 square feet, or a metal, masonry, or concrete structure, calculations and plans, stamped by a Washington State licensed engineer may be required. The building official may require additional drawings, details, sections, or stamped-engineered calculations and/or details.

Directions to Site: Provide accurate directions to your project site. This information will be used by staff when they review the project and by building inspectors

Structural Engineered Calculations: Will be required if the proposed structure does not meet conventional construction standards. Include 2 sets of calculations with your permit application.

Driveway Access Permit: May be required if accessing a public road or right of way. Contact Mason County Public Works at (360) 427-9670, ext. 450

Washington State Energy Code: WSEC Energy envelope calculations and air quality compliance.

Existing On-Site Sewage System: Documentation of approved on-site sewage system and satisfactory operation and maintaince report within last 3 years.

Septic Approval or Sewer Permit: Septic design application must be approved by the Mason County Public Health prior to permit issuance for all development with septic systems. If sewer is available, sewer permits can be obtained by calling Mason County Utilities.

Water Availability: The water system manager must complete a Water Adequacy application if the project will be connected to a public/community water system. Private wells systems require a water well report, or capacity test, and bacteriological test within last 12 months.

RLC/Pre-Inspection: Pre- site inspection may be necessary for application. A site visit completed by a planner to identify critical areas and setback on the site.

Aquifer Recharge Areas: Areas where water infiltrates the soil, and percolates through it and surface rocks, to the groundwater table. These areas are mapped with Mason County Community Development.

Critical Area: Critical areas include shorelines, flood plains, streams, wetlands, important wildlife habitat areas and landslide hazard areas (such as steep slopes and marine bluffs). The planner may need to visit your site to decide whether a buffer zone is required between the critical area and the proposed structures. Please mark the corners of the proposed structure with flags or stakes.

Geotechnical Study: A geotechnical assessment or report will be required if the development is within 300 ft of a slope 14% or greater. Additionally if the parcel is located within a mapped Landslide/Erosion Hazard Area

Wetland: Areas that are inundated or saturated by surface water or ground water at a frequency and duration sufficient to support, and that under normal circumstances do support a prevalence of vegetation typically adapted for life in saturated soil conditions. Wetlands generally include swamps, marshes, bogs, and similar areas.

Buffer: An area of land or designated for the purpose of insulating or separating a structure or land use from a critical area or resource land in such a manner as to reduce or mitigate any adverse impacts of the developed area.

Parcel Number: a 12-digit tax assessment number assigned to each parcel by the Assessor's Office.

Legal Description: This describes the parcel of land identified by the 12-digit tax identification number. It is acceptable to submit a legal description of the parcel as it appears on deeds, real estate contracts, and statutory warranty deed, or in records at the Assessor's office. Legal descriptions are used to check the dimensions of a parcel and any underlying restrictions (such as setbacks from property lines or easements, lot coverage, or height of buildings).

Address: Site addresses are assigned through the Mason County Department of Community Development; call (360) 427-9670 ext. 352 for more information.

Contractor Registration Number: Contractors must be licensed with the state. The contractor license number can be obtained from the general contractor that will be performing the work or through the Labor & Industries website at: https://wws2.wa.gov/lni/bbip/contractor.asp an owner can be an owner-contractor when building on his or her own property.

SEPA: The State Environmental Policy Act, 43.21c RCW and implementing State and County administrative rules.

Name_____ Parcel # _____ BLD#_____

Mason County
Department of Community Development
Small Parcel Stormwater Management Application/Worksheet (page 1 of 2)

Per Mason County Code, Title 14, Chapter 14.48 a stormwater site plan is required whenever a building application is made for residential development, or redevelopment[1], with more than 2,000 square feet of impervious surface[2].

[1]Redevelopment means, on an already developed site, the creation or addition of impervious surfaces, structural development including construction, installation or expansion of a building or other structure, and/or replacement of impervious surface that is not part of a routine maintenance activity, and land disturbing activities associated with structural or impervious redevelopment.

[2]Common impervious surfaces include, but are not limited to, rooftops, walkways, patios, driveways, parking lots or storage areas, concrete or asphalt paving, gravel roads, packed earthen materials, and oiled, macadam or other surfaces which similarly impede the natural infiltration of stormwater. Open, uncovered retention/detention facilities shall not be considered as impervious surfaces.

To Calculate Impervious Surfaces Please Complete This Table						
Surface Type	**Length**	**X**	**Width**	**=**	**Area**	*** All dimensions in feet**
Buildings		X		=		Measurements for buildings are taken at the perimeter of the farthest projections (example: eaves/gutters)
		X		=		
		X		=		
		X		=		
Driveways		X		=		Length of drive begins at the right of way
		X		=		
		X		=		
Parking Areas		X		=		Any paved, gravel or packed area per definition above table
		X		=		
		X		=		
Patios/Walks		X		=		Any paved, gravel or packed area per definition above table
		X		=		
		X		=		
Others		X		=		If the total impervious area of the proposed site development is greater than 2000 square feet a Small Parcel Stormwater Site Plan is Required
		X		=		
		X		=		
Total Impervious Surface Area (sum of all areas)						

If the Total Impervious Surface Area is LESS THAN 2000 Square Feet, please read, acknowledge and sign below.

Based Upon the information you have provided a ***Stormwater Site Plan IS NOT required*** for this development activity.

Owner/Builder/Agent Acknowledges that submission of inaccurate information may result in a stop work order or permit revocation. Acknowledgement of such is by signature below. I declare that I am the owner, owner's legal representative, or the contractor. I further acknowledge that the information provided is accurate and employees of Mason County are granted access to the above-described property for review and inspection as may be required.

X_____ Owner/Agent/Contractor (circle one) Date:_____

If the Total Impervious Surface Area is GREATER THAN 2000 Square Feet, please read, acknowledge and sign the information provided on page 2 of 2.

Name_____ Parcel # _____ BLD#_____

Mason County
Department of Community Development
Small Parcel Stormwater Management Application/Worksheet (page 2 of 2)

Based Upon the information you have provided a ***Stormwater Site Plan IS Required*** for this development activity.

Title 14, Chapter 14.48 of the Mason County Code (MCC) regulates compliance requirements for Stormwater Management in this jurisdiction. A complete copy of the ordinance can be found on the Mason County website: http//www.co.mason.wa~us/code/commissioners/index.htm
Please follow the links to "Title 14, Chapter 14.48 Stormwater Management".

Regulated activities shall be conducted only after Mason County Public Works approves a stormwater site plan (Mason County Code Title 14 Chapter 14.48 section 14.48.70). You will receive a copy of the Public Works document entitled "Managing Storm Drainage on Small Lots, The Small Parcel Stormwater Site Plan". This document will assist you in preparing the necessary information and plans for Public Works to review and approve. **Per Department of Public Works this document will constitute an approved plan if all of the relevant details* are to be installed in their entirety AND no part of the stormwater system adversely affects any septic system** (see Environmental Health information below). If an alternative system is to be used a plan will need to be submitted to Public Works for approval. A design by a registered professional may be required for more complex sites.

*These details are found in the document *Managing Storm Drainage on Small Lots, The Small Parcel Stormwater Site Plan* on the pages that begin with "Handout"

PLEASE INITIAL BELOW TO INDICATE THE STORMWATER MANAGEMENT PLAN FOR THIS SITE

A) _____ The relevant details from *Managing Storm Drainage on Small Lots, The Small Parcel Stormwater Site Plan* will be installed in their entirety AND the system will be located as not to adversely affect any septic systems on this, or any other, parcel.

B) _____ An alternative plan and/or professional design will be submitted to the Department of Public Works for approval AND the system will be located as not to adversely affect any septic systems on this, or any other, parcel.

If you have further questions pertaining to parcel drainage and stormwater management Mason County's Public Works Department can provide additional instructions, guidance and examples. (Section 14.48.130) contact Public works at:

Phone: (360)-427-9670 EXT. 450
Mail: P 0 Box 1850, Shelton WA 98584
Physical: 415 N 6th St, Shelton WA 98584

If this development has, or will have, a septic/drainfield system you may need to contact Mason County Division of Environmental Health to ensure that the stormwater system will not adversely affect the septic system of this, or any other, parcel. You may also wish to consult with the septic design professional involved with the project. Mason County Division of Environmental Health can be reached at:

Phone: (360)-427-9670 EXT. 352
Mail: P 0 Box 1666, Shelton WA 98584
Physical: 426 W Cedar St, Shelton WA 98584

A condition will be added to the building permit that states, in part, that all conditions the stormwater site plan will be met prior to a request for final inspection of the building permit.

Owner/Builder/Agent Acknowledges that submission of inaccurate information may result in a stop work order or permit revocation. Acknowledgement of such is by signature below. I declare that I am the owner, owner's legal representative, or the contractor. I further acknowledge that the information provided is accurate and employees of Mason County are granted access to the above-described property for review and inspection as may be required.

X_____ Owner/Agent/Contractor (circle one) Date:_____

COMMUNITY DEVELOPMENT ENVIRONMENTAL HEALTH REVIEW

Mason County Public Health

415 N. 6th Street
PO Box 1666
Shelton, WA 98584
Shelton: (360) 427-9670, Ext. 400
Belfair: (360) 275-4467 Ext. 400
Elma: (360) 482-5269 Ext. 400
Fax (360) 427-7787

Official use only

Permit Number: _____

Date Received: _____

Amount Received _____

Receipt Number _____

Applicant Information

Applicant_____ Date_____

Mailing Address_____

_____

City State Zip

Daytime Phone_____ Other Phone _____

E-Mail Address_____

Type of Review

- ☐ Building Permit
  - ☐ New ☐ Replacement
- ☐ Commercial Building Permit
  - ☐ New ☐ Replacement
- ☐ Building/Commercial Permit Revision
- ☐ Tenant Review
- ☐ Pre-Application

Parcel Information

12-Digit Parcel Number _____

Site Address _____

Street Number Street Name City

Type of Job

Describe work _____

Number of Bedrooms _____

Please submit a scaled plot plan showing all existing and proposed building, on-site sewage system, and well.

On-Site Sewage Information

☐ On-Site Septic System ☐ New ☐ Existing

☐ Sewer Name of Sewer System _____

Using an existing on-site septic system will require a current maintenance report and a Record Drawing (Asbuilt). Documents for both of these requirements may be on file with Mason County Public Health. Other requirements may apply.

Water System Information

Plumbing in structure? ☐ Yes ☐ No

If yes:

Please submit a completed Water Adequacy Form.

Applicant Signature

_____ Date _____

Official use only

Departmental Review	Approved	Denied	Notes
Water Adequacy			
On-site Sewage System			
Tenant Review			
Revision			

Revised 12/17/09

MASON COUNTY
CARPORT/COVERED DECK DETAIL

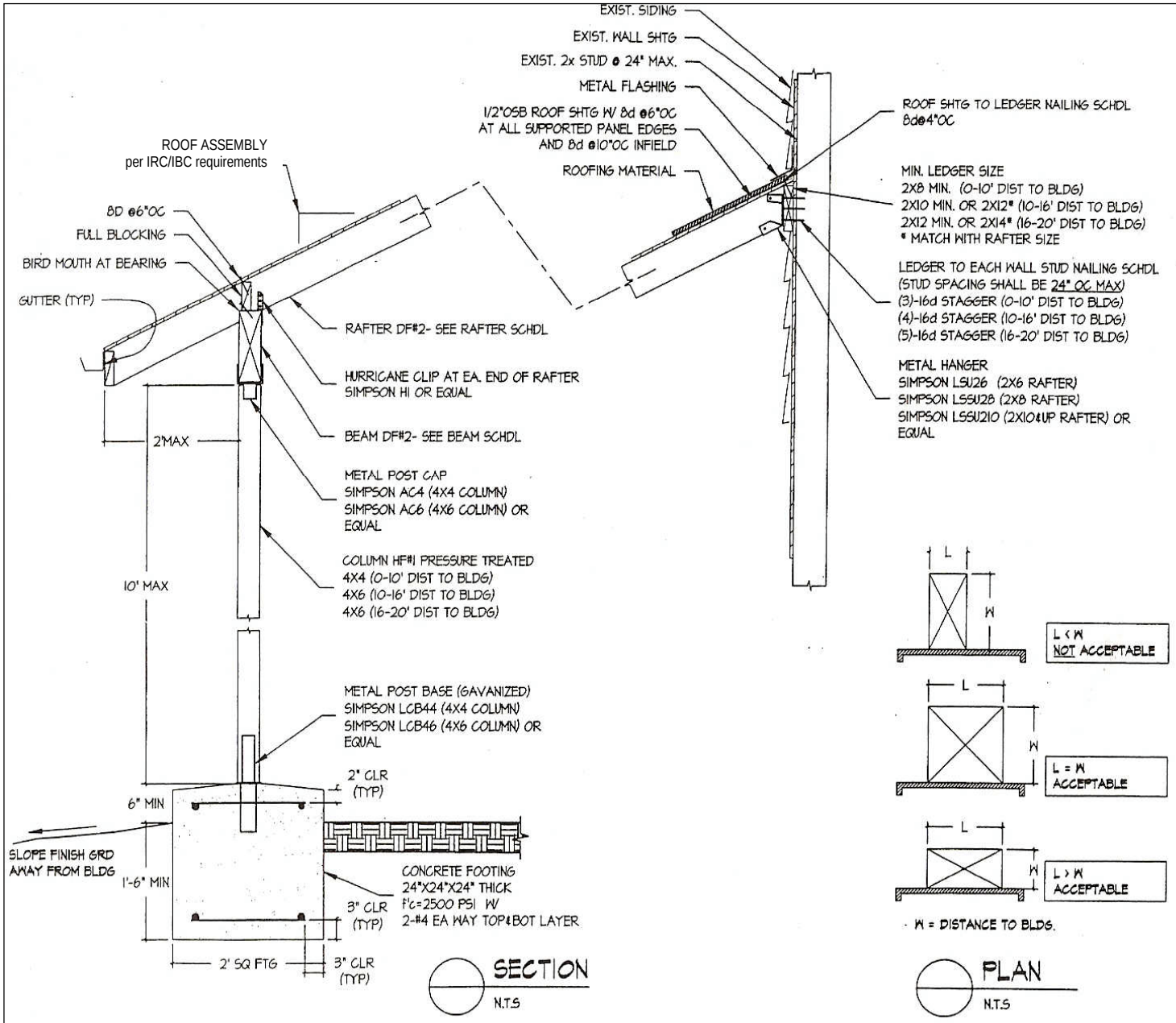

NOTE:
RAFTER, BEAM, COLUMN SIZE AND THEIRS CONNECTION ARE BASED ON THE FOLLOWING ASSUMPTION.
VERTICAL LOAD:
ROOF DL = 10 PSF (NO TILE ROOF)
SNOW = 25 PSF

SNOW LOADS >25# REQUIRE ALTERNATE RAFTER AND BEAM SIZING APPROPRIATE FOR LOADING.

RAFTER SIZES (DF#2)

		DISTANCE TO BUILDING		
		0'-10'	10'-16'	16'-20'
SPACING	12" OC	2 X 6	2 X 8	2 X 10
	16" OC	2 X 6	2 X 10	2 X 12
	24" OC	2 X 8	2 X 12	2 X 14

BEAM SIZES (DF#2)

		DISTANCE TO BUILDING		
		0'-10'	10'-16'	16'-20'
BEAM SPAN	5'	4 X 4	4 X 6	4 X 6
	6'	4 X 6	4 X 6	4 X 8
	7'	4 X 6	4 X 8	4 X 8
	8'	4 X 6	4 X 8	4 X 10
	9'	4 X 8	4 X 10	4 X 10
	10'	4 X 8	4 X 10	4 X 12

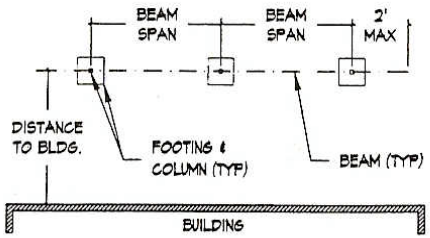

Construction is limited to the specifications of
This diagram including maximum 10′ post height maximum 10′ beam span (post spacing).

Mason County Building Department

Residential Deck, Stair, Landing and Guard Detail

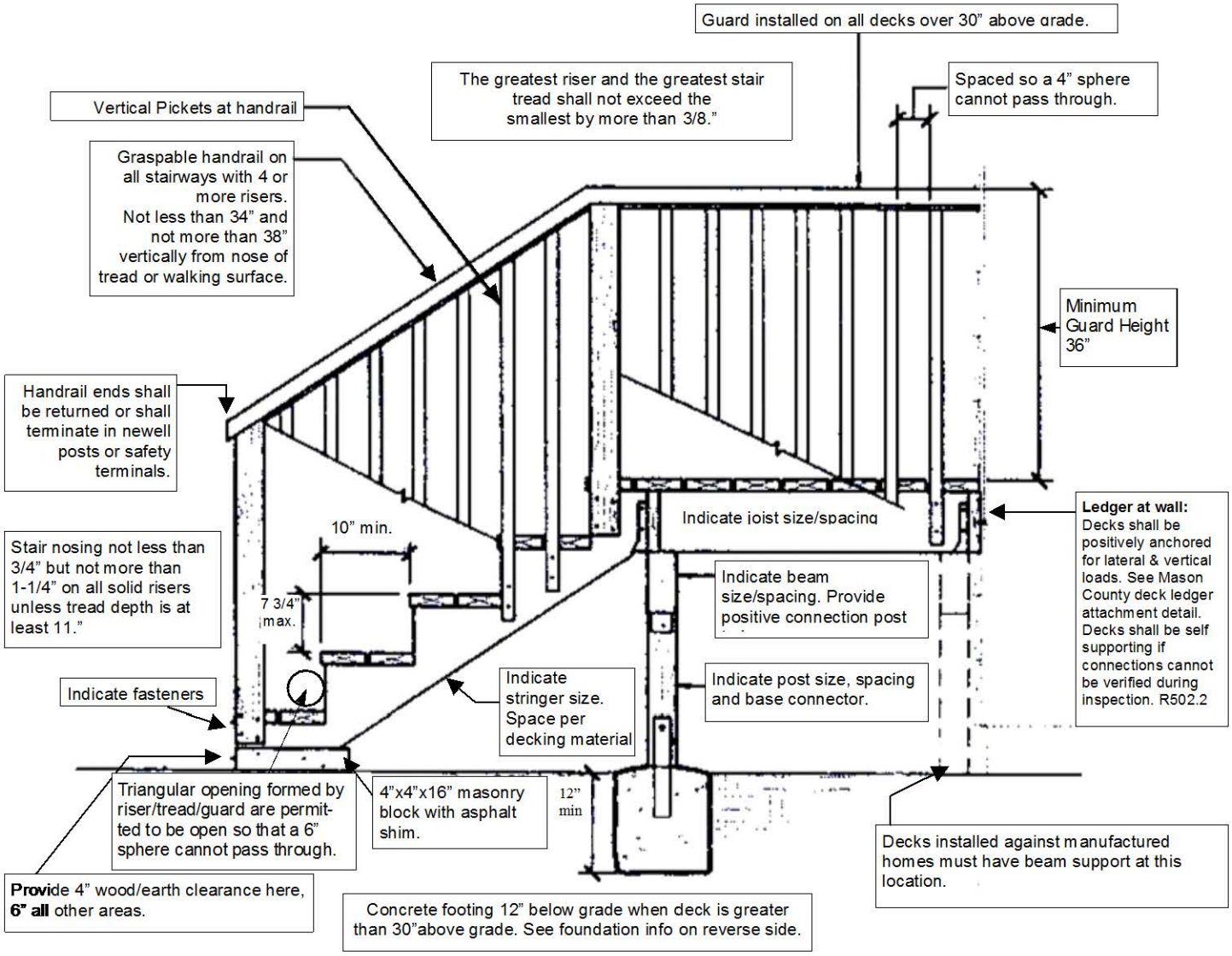

Typical Door with 3 Risers

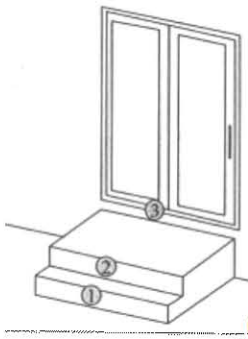

Landings are required on each side of each exterior door. *Exception: A landing is* not required with two or fewer risers.

Landings shall not be more than 1-1/2" lower Than the top of the threshold. Exception: The landing shall not be more than 7-3/4" lower than the threshold provided the door does not swing over the landing.

CONSTRUCTION MATERIALS

Decay resistant woods heartwood of redwood, cedar, black locust and pressure preservatively treated wood are all acceptable material for use in deck construction. Field applied treatment is not an acceptable method. Fasteners for pressure preservative treated woods shall be of hot-dipped galvanized steel, stainless steel, silicon bronze or copper. Field cut ends, notches and drilled holes of pressure preservatively treated wood shall be retreated in the field in accordance with AWPA M4.

IRC R319 & R320.

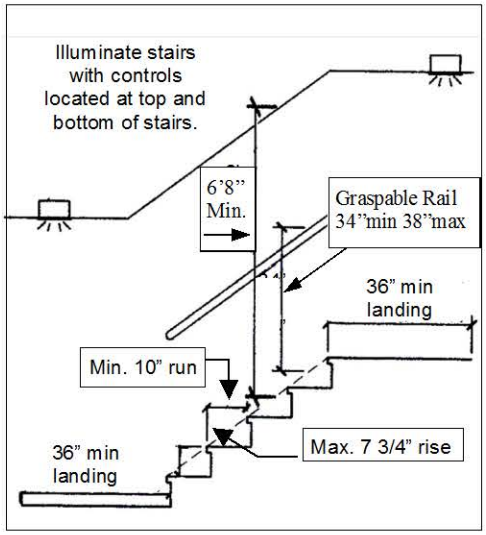

Handrail Details

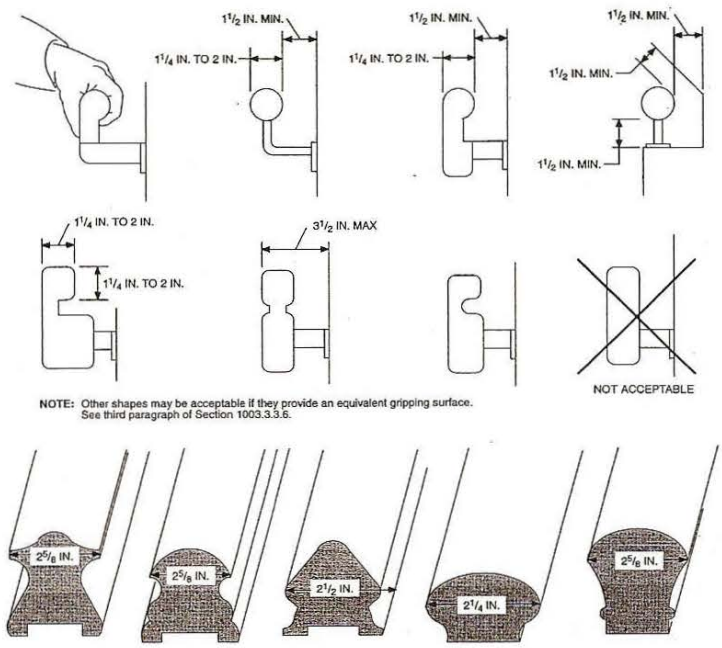

All stairways with 4 or more risers shall have at least one handrail. Such handrails shall be placed not less than 34" nor more than 38" above the nose of the treads and shall be continuous for the full length pf the flight. Handrail ends shall be returned or terminate in the newel post or safety terminals. Handrails adjacent to the wall shall have a space not less than 1 ½" between the wall and the handrail. Circular handrails shall have an outside diameter of at least 1 ¼" and not more than 2." Handrails with a perimeter greater than 6 ¼" shall provide a graspable finger recess on both sides. Handrails shall not project more than 4 ½" on either side of the stairway.

FOUNDATION SUPPORT SYSTEMS

- Decks 30" or less above grade: Minimum 12"x12" manufactured pier.
- Deck 30" to 5'0" above grade: Minimum 14"x14" manufactured pier set 12" below grade.
- Decks greater than 5'0" above grade: Minimum 18"x18"x18" poured in place footing set 12" below grade.

All deck posts shall have a positive post to footing and positive post to beam connection.
Deck height is measured at the lowest point within 5'0" beyond the walking surface of the deck.

DECK PLAN

EXAMPLE ONLY

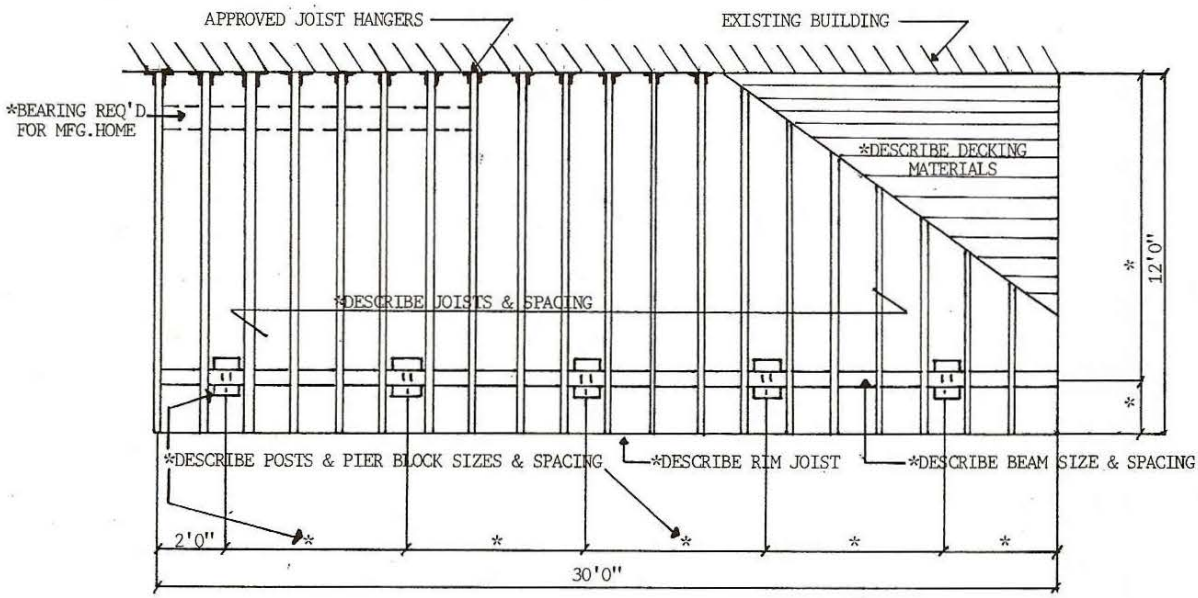

MASON COUNTY
DEPARTMENT OF COMMUNITY DEVELOPMENT

Mason County Bldg. III, 426 West Cedar Street
PO Box 279, Shelton, WA 98584

www.co.mason.wa.us (360) 427-9670 Belfair (360)275-4467 Elma (360)482-5269

Deck Ledger Attachment Details & Specifications

Please see Mason County Checklist item #56 and #69
for additional wood and fastener requirements

Fastener spacing for solid sawn deck ledger to an existing band (rim) joist.
(Deck Live Load = 40 psf & Dead Load = 10 psf) •

Joist Span	6'-0" and Less	6'-1" to 8'-0"	8'-1" to 10'-0"	10'-1" to 12'-0"	12'-1" to 14'-0"	14'-1" to 16'-0"	16'-1" to 18'-0"
Connection Details	On-Center Spacing of Fasteners						
1/2" diameter lag screw with 15/32" maximum sheathing	30	23	18	15	13	11	10
1/2" diameter bolt with 15/32" maximum sheathing	36	36	34	29	24	21	19
1/2" diameter bolt with 15/32" maximum sheathing and ½" stacked washers	36	36	29	24	21	18	16

- **Lag screw tips shall extend beyond the inside face of the band/rim joist**
- **Maximum gap between band/rim joist and ledger shall be ½" with spacer(s)**
- **Flashing shall be installed to prevent water intrusion at structural attachment**
- **Deck Ledger shall be minimum 2x8 pressure preservative treated No. 2 grade lumber**
- **Lag screws and bolts shall be staggered per diagram below**

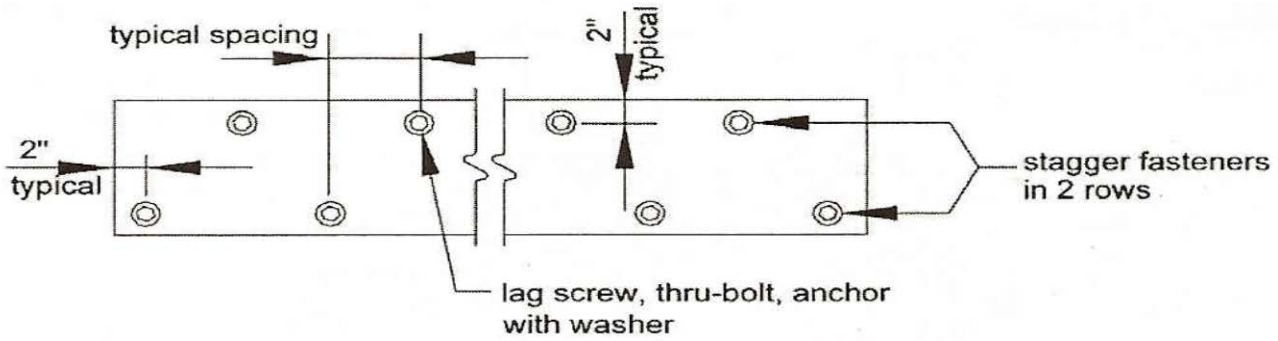

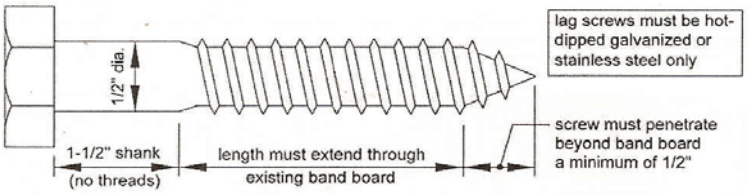

Please see typical diagrams on reverse for construction details.

Typical Construction Details

Deck Ledger shall be 2x pressure preservative treated No. 2 grade lumber (2 x 8 minimum)
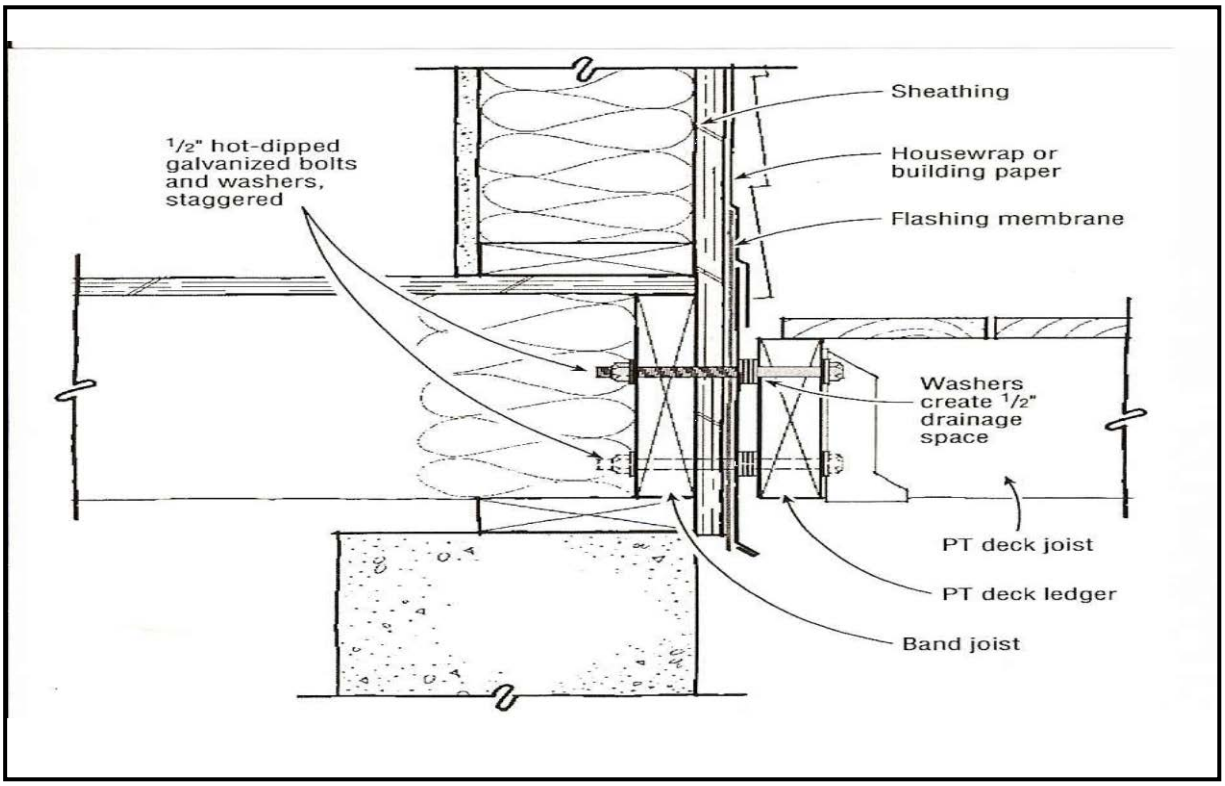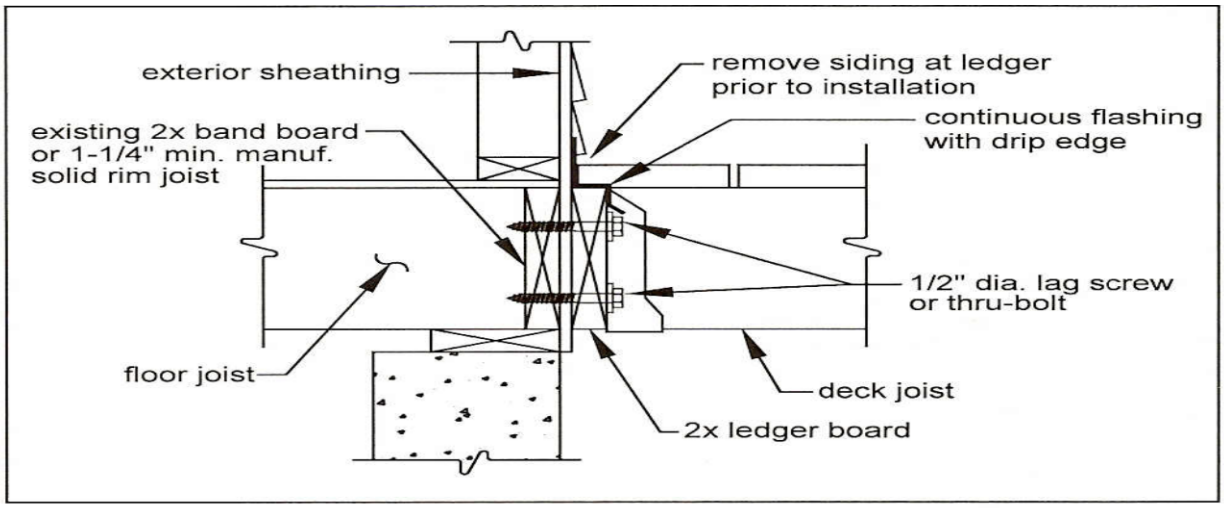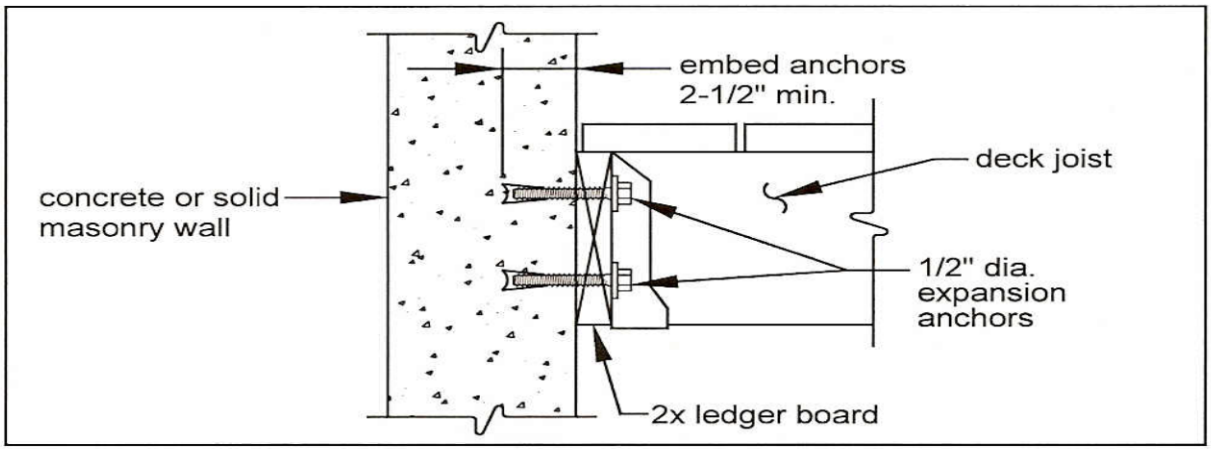
Ledger shall be equal to (or greater than) joist sizes larger than 2 x 8 nominal