Mason County

ROAD STANDARDS

Mason County Public Works

Adopted : abcd, xyzz

Contents

1 Introduction 1

1.1 Authority and Intent 1

1.2 Application 2

1.3 Associated Regulations and Specifications 2

1.4 Design Approval and Technical Deviation Procedure 3

1.5 Permits 4

1.6 Fees 5

1.7 Responsibility to Provide Roadway Improvements 5

1.8 Definitions 5

1.9 Survey Monuments 9

2 Design Criteria 10

2.1 Functional Classifications 10

2.1.1 Federal Functional Classifications 12

2.1.2 Local Road Functional Classifications 13

2.2 Design Vehicle 14

2.3 Design Speed 15

2.4 Design Volumes 15

2.5 Design Year 15

2.6 Stormwater Management 15

2.7 Requirements for On-Street Parking 16

3 Design Elements 17

3.1 Vertical Alignment 17

3.2 Sight Distance 18

3.2.1 Stopping Sight Distance 18

3.2.2 Decision Sight Distance 19

3.3 Grade 19

3.4 Horizontal Alignment 20

3.5 Right of Way 21

3.6 Pavement 21

3.6.1 Road Widening/Adding Traveled Way to Existing Roads 22

3.7 Roadway Feature Design Values 23

3.7.1 Cul-de-sacs 26

3.7.2 Two-Way Single-Lane Roads 27

3.7.3 Shoulders 27
3.7.4 Curbs 27
3.7.5 Non-Motorized Facilities 28
3.8 Clear Zone and Roadside Features 29
3.8.1 Side Slopes 30
3.8.2 Mailboxes 31
3.8.3 Traffic Barriers 32
3.8.4 Retaining Walls 32
3.8.5 Street Trees 32
4 Access and Intersections 34
4.1 Access Control 34
4.1.1 Intersection Functional Area 36
4.2 Roadway Intersections 36
4.2.1 Angles 36
4.2.2 "L" Intersections 37
4.2.3 Corner Radii 37
4.2.4 Intersection Control 38
4.2.5 Geometrics 39
4.2.6 Medians 40
4.3 Road Approaches 40
4.3.1 Residential Road Approach 41
4.3.2 Major Road Approach 41
4.3.3 Construction Criteria 42
4.3.4 Temporary Road Approach 42
4.3.5 Failure to Construct Properly 42
5 Traffic Control 43
5.1 Signs 43
5.1.1 Regulatory, Warning, and Guide Signs 43
5.1.2 Private Road Name Signs 43
5.2 Delineation 43
6 Plan Preparation and Submittal 45
6.1 General Criteria 45
6.2 General Plan Formatting 45
6.2.1 Cover Sheet 45
6.2.2 Horizontal Plan 45

6.2.3 Profile Plan 46
6.2.4 Intersection Plan Details 47
6.2.5 Channelization and Signage Plan 47
6.3 Time Limitation of Approval 48
6.4 Submittal Procedure 48
6.5 Changes to Approved Plans 48
7 Utility Installation and Work in County Right of Way 50
7.1 Permits 50
7.1.1 Emergency Repairs 50
7.2 Sureties, Liability Insurance, and Indemnification 50
7.2.1 Surety Bond 50
7.2.2 Waiver of Bonding Requirements 51
7.2.3 Commercial Liability Insurance 51
7.2.4 Indemnification 52
7.3 General Installation Guidelines 52
7.4 Adjustment and Relocation of Existing Utilities 53
7.5 Underground Utility Installation 53
7.5.1 Cover and Separation 55
7.5.2 Casings 55
7.5.3 Existing Roadways 56
7.5.4 Testing 58
7.5.5 Individual Service Lines 58
7.6 Above Ground Utilities 59
7.6.1 Power and Communication Lines 59
7.7 Installations on Roadway Bridges and Structures 60
7.8 Miscellaneous Provisions 60
7.8.1 Preservation, Restoration, and Cleanup 60
7.8.2 Traffic Control and Public Safety 61
7.9 Final Utility Adjustment to Finish Grade 61
7.10 Final Cleanup and Restoration 61
8 Construction Control and Inspection 62
8.1 Basis for Control of the Work 62
8.2 Temporary Traffic Control 62
8.2.1 Interim Traffic Control 62
8.2.2 Temporary Road Closures and Detours 63

8.2.3 Haul Routes 64
8.2.4 Work Zone Clear Zone 64
8.3 Right of Way Construction Inspection 65
8.4 Penalties for Failure to Notify for Inspection 66
8.5 Embankment Construction Control in Developments 67
8.6 Asphalt Paving Control and Acceptance 67
8.7 Survey Control 68
8.8 Call Before You Dig 69
9 Permits and Standards for Use and Improvements to County Right of Way 70
9.1 Authority and Purpose 70
9.2 Permit Required 70
9.3 Permit Type and Requirements 70

List of Tables and Figures

Table 3-1: Minimum Stopping Sight Distance 19
Table 3-2: Maximum Centerline Grade 20
Table 3-3: Local Roadway Design Values 23
Table 3-4: Design Values for Arterial Roadway Features 24
Table 3-5: Clear Zone Requirements 30
Table 4-1: Design Intersection Sight Distance 38
Figure 3-1: Typical Urban Roadway Section - Cement Concrete Barrier Curb, Gutter, and Sidewalk 76
Figure 3-2: Typical Rural Roadway Section - Gravel Shoulders and Open Drainage 77
Figure 3-3: Typical Rural Roadway Section - Thickened Edge Curb 78
Figure 4-1: Standard Detail - "L" Intersection Very Low Volume Local Roads 79
Figure 4-2: Standard Detail - Rural Residential / Major Approach 80
Figure 4-3: Standard Detail - Urban Residential Approach 81
Figure 4-4: Standard Detail - Urban Major Approach 82
Figure 4-5: Standard Detail - Urban Major Approach - Planter Strip 83
Figure 4-6: Standard Detail – Private Road and Driveway Section 3 SFU 84
Figure 4-7: Standard Detail – Private Road and Driveway Section 4 SFU 85
Figure 4-8: Standard Detail - Example Departure Sight Distance Diagram 86
Figure 5-1: Standard Detail - Type ST-2 Sign Support 87
Figure 5-2: Standard Detail - Typical Thermoplastic Crosswalk Pavement Markings 88
Figure 7-1: Standard Detail - Standard Trench and Pavement Restoration 89
Figure 8-1: Standard Detail - Cased and Surface Road Monuments 90

MASON COUNTY ROAD STANDARDS

1 Introduction

1.1 Authority and Intent

Chapter 36.75 RCW requires that County roads be established, laid out, constructed, altered, repaired, improved, and maintained by the County or by private individuals or entities authorized to perform such work under an agreement with the County legislative authority. Such work and improvements shall be done in accordance with adopted County standards under the supervision and direction of the County Engineer. Mason County is exempt from these Road Standards due to the wide variety of existing conditions and required maintenance activities.

These Standards were developed to provide minimum design requirements for the safety, welfare, and convenience of the traveling public. They are intended to assist, but not substitute for competent work by design professionals. It is expected that land surveyors, engineers, and architects bring to each project their best skills from their respective disciplines.

Application of minimum requirements does not take the place of sound engineering practice. Project Engineers designing road improvements under these Standards should consider all available information and use professional judgment based on training and experience to make final design determinations. Acceptance of plans by the County does not relieve the proponent or engineer from responsibility for ensuring that the design, specifications, and construction comply with current engineering standards and applicable federal and state laws and codes.

These Standards are not intended to represent the legal standard by which the County's duty to the traveling public is measured. These Standards are not intended to limit any reasonable innovative or creative effort that improves quality or reduces costs or potential environmental impacts. Any proposed departure from these Standards shall be judged on the likelihood that it shall produce a compensatory or comparable result, in every way adequate for County Road users and residents and without significant reduction in level of service, safety, or operational efficiency.

Mason County encourages the use of low impact development techniques that minimize impervious surfaces, loss of native vegetation and runoff generation associated with development. The County Engineer may support deviations from adopted standards when low impact development techniques are employed without risk to the traveling public, critical infrastructure, or maintenance operations.

These Standards are intended to encourage standardization of road design elements and to help meet the public safety needs of motorists, bicyclists, and pedestrians. They address safety, convenience,

appearance, stormwater management, economical maintenance, and requirements for the installation of utilities within transportation rights of way.

Shortened Designation: These Mason County Road Standards shall be cited routinely in the text as the **"Standards" or "Road Standards."**

1.2 Application

The Mason County Road Standards apply to all designed and newly constructed or reconstructed public roads, sidewalks, and trails within Mason County rights of way or within private property to be dedicated to Mason County for right of way. They do not apply to roads in existence prior to the adoption of these Standards. The Standards are not intended to apply to general maintenance activities performed on roads.

Land development activity that shall impact the level of service, safety, or operational efficiency of existing roads or that is required by other County Codes or ordinance to improve such roads, may be required to provide improvements in accordance with these Standards. The need for frontage and/or off-site improvements to existing County roads shall be based on an assessment of the potential impacts of the proposal.

These Standards apply to the design and construction of County roads both by Mason County and the private development community. These Standards are intended to govern the construction of privately maintained roads that are located outside County rights of way to the extent described herein.

1.3 Associated Regulations and Specifications

All road plans submitted to the County for review and approval shall be consistent with these Standards and current or amended County standards and ordinances, and Mason County Code.

Stormwater management requirements associated with road improvements shall comply with the requirements of the Mason County Code, as it now exists or is hereafter amended. This document does not establish or supersede any of the requirements established in the Mason County Code-Stormwater Drainage, or other pertinent regulatory requirements. The Project Engineer must observe all other applicable regulations and design standards.

The most current edition as amended of the following publications and manuals shall be applicable when specifically cited in the Standards or when required by state or federal funding authorities.

1. A Policy on Geometric Design of Highways and Streets, American Association of State Highway and Transportation Officials (AASHTO), as amended and approved by WSDOT (commonly referred to as the "Green Book" in these Standards)

2. Standard Specifications for Road, Bridge and Municipal Construction, Washington State Department of Transportation (WSDOT) and American Public Works Association (APWA)

3. Standard Plans for Road, Bridge and Municipal Construction, WSDOT and APWA
4. WSDOT Design Manual
5. Local Agency Guidelines, WSDOT
6. Guidelines for Geometric Design of Very Low-Volume Local Roads (ADT less than or equal to 400), AASHTO
7. Roadside Design Guide, AASHTO
8. Manual on Uniform Traffic Control Devices (MUTCD), Federal Highway Administration (FHWA), as amended and approved by WSDOT.
9. Construction Manual, WSDOT
10. Guide for the Development of Bicycle Facilities, AASHTO
11. Guide for the Planning, Design, and Operation of Pedestrian Facilities, AASHTO
12. Traffic Manual, WSDOT
13. Highway Capacity Manual, Transportation Research Board
14. Trip Generation Manual, Institute of Transportation Engineers
15. Bridge Design Manual, WSDOT

1.4 Design Approval and Technical Deviation Procedure

It is the intent of these design standards to allow the design professional maximum latitude in the geometric design of roadways within the County while keeping within the realm of acceptable design practice. To provide this latitude, it is recognized that there is a certain amount of discretion inherent in implementing these Standards. The County Engineer shall make the final determination of the adequacy of the design parameters and standards employed on a particular project.

If representatives for a private development project disagree with a determination by the County Engineer, or wish to request a deviation from these Standards, they may do so by submitting to the County Engineer a Request for Technical Deviation.

The Request for Technical Deviation shall at a minimum:

1. Be in writing and state the nature of the request.
2. State why the deviation is necessary and identify any adverse impacts.
3. Include supporting drawings and calculations demonstrating how the request meets the intent of the Road Standards

4. Reference resource materials pertinent to the request and other supporting documents

5. Include an engineering analysis of the alternatives.

6. Be signed and sealed by a Washington State licensed professional engineer.

The County Engineer may allow fewer requirements for non-engineering minor deviation requests.

The County Engineer shall evaluate the request for deviation on these criteria:

1. The technical deviation shall not otherwise result in non-compliance with the Road Standards Ordinance or any other applicable code.

2. The granting of the technical deviation shall not result in non-compliance with development conditions imposed upon a project by the Department of Community Development, the Hearing Examiner and/or Board of Commissioners.

3. The granting of the technical deviation shall produce a compensating or comparable result that is in the public interest; and,

4. The granting of the technical deviation shall meet the objectives of safety, function, appearance, environmental protection, and maintainability based on sound engineering judgment.

Within twenty (20) calendar days of the receipt of the Request for Technical Deviation, the County Engineer shall, in writing, accept, deny, or accept with conditions the request. If the request is denied, the County Engineer shall state the reasons for the denial. An aggrieved party may appeal any administrative interpretation or departmental ruling related to the Standards by following the process set forth in Mason County Code, as it now exists or is hereafter amended.

1.5 Permits

No person, firm, partnership, association, joint venture, corporation, or other public or private legal entity shall conduct any construction activity within County right of way unless the work is in accordance with a valid "Permit to Perform Work in County Right of Way". To obtain a permit, the applicant shall apply to the Department of Public Works. The application submittal shall include a copy of the construction plans, meeting all applicable requirements. A copy of each "Permit to Perform Work in County Right of Way" shall be available for inspection at the construction site for the duration of the work.

Other Permits. Approval and issuance of the permits prescribed in Chapter 9 - Category 2 Right of Way Use Permit, does not constitute approval of other applicable permits or requirements that may be required by other County ordinances, state, or federal laws. It shall be the responsibility of the applicant to obtain all other permits and approvals required by other county, state, or federal laws.

Examples of some additional permits that may be required include, but are not limited to:

1. Hydraulic project approval (HPA) by the Washington State Department of Fish and Wildlife

2. Construction and industrial discharge permits administered by the Washington State Department of Ecology under the National Pollutant Discharge Elimination System (NPDES) program.

3. Access connection permits issued by WSDOT.

4. State Environmental Policy Act (SEPA) approval

5. Critical Areas, Grading, Building, Forest Practice, Site Development Activity Permit (SDAP)

1.6 Fees

Fees required under this Ordinance and/or the Standards are as specified in the Mason County Development Permit Fee Schedule which is adopted by resolution.

1.7 Responsibility to Provide Roadway Improvements

A. Any land development which will impact the service level, safety, or operational efficiency of roads serving such land development or which is required by other county code or ordinance to improve such roads, shall improve those roads in accordance with these Standards. Off-site roadway improvements shall be based on an assessment of the impacts of the proposed land development.

B. Any land development abutting existing or proposed roads shall improve the frontage of those roads in accordance with these Standards.

C. For all existing structures with remodels greater than 50 percent of the assessed value of the structure in any three-year period, then the road improvement standards apply to the entire site. Remodeling includes improvements to the interior, exterior or any combination of interior or exterior improvements to the site's structure(s) or other area(s) on-site.

D. If the development is within an area where the County has adopted by resolution a subarea plan, Complete Street Plan, and or other transportation planning study identifying higher standards, the County Engineer may require those standards.

1.8 Definitions

Where terms, phrases and words are not defined, they shall have their ordinary accepted meanings within the context in which they are used. Webster's Third New International Dictionary of the English Language, unabridged, 1993 edition, shall be considered as providing ordinarily accepted meanings.

"**Applicant**" shall mean any person, firm, partnership, association, joint venture, corporation, or other public or private legal entity that proposes to engage in any construction activities within County rights of way.

"**Approach**" shall mean a connection providing private vehicular access to or from the County Road system

"**Arterial Road System**" shall mean roads within Mason County that have been classified using the federally designated functional class system. This system is used by the federal government to distribute transportation funds to local agencies. Arterial roads are typically intended to provide mobility while controlling direct access. Examples of arterials are (Principal Arterial), (Minor Arterial), and (Collector).

"**Auxiliary Lane**" shall mean the portion of the roadway adjoining the traveled way for parking, speed change, truck climbing, turning or other purposes supplementary to through-traffic movement, but shall not mean shoulder.

"**Average Daily Traffic (ADT)**" shall mean the volume of traffic passing a point or segment of a road, in both directions, during a short period of time, divided by the number of days in the period. When only periodic counts are taken, the ADT volume can be converted to Annual Average Daily Traffic (AADT) by applying monthly, day of week, axle factor, and growth factor.

"**Bioretention**" shall mean engineered facilities that treat stormwater by passing it through a specified soil profile, and either retain or detain the treated stormwater for flow attenuation.

"**Bulb**" shall mean a round area for vehicle turnaround typically located at the end of a cul-de-sac.

"**Clear Zone**" shall mean the unobstructed, traversable area provided beyond the edge of the through way, for the recovery of errant vehicles. The clear zone includes the shoulders, bike lanes, and auxiliary lanes, except those auxiliary lanes that function like through lanes.

"**County**" shall mean Mason County.

"**County Engineer**" shall mean the Mason County Road Engineer, having the authority specified in the Mason County Code and under RCW 36.75.050 and 36.80, or his/her assigned designee.

"**Cul-de-sac**" shall mean a short loop road, or road having only one end open to traffic and the other temporarily or permanently terminated by a vehicle turnaround.

"**Department**" means the Department of Public Works.

"**Design Hourly Volume (DHV)**" shall mean generally the 30th highest hourly volume of the future year chosen for design. On the average rural road or arterial, DHV is about 15 percent of ADT. For urban areas, DHV is usually between 8 to 12 percent of the ADT.

"**Design Speed**" shall mean a selected speed used to determine the various geometric design features of the roadway.

"**Developer**" shall mean any person, firm, partnership, association, joint venture, corporation or other public or private legal entity participating as owner, promoter, or sales agent in the planning, platting, development, promotion, sale, or lease of lands that are subject to the provisions of these Standards.

"**Fire Code**" shall mean the Fire Code adopted by Mason County Board of Commissioners under Mason County Code as it now exists or is hereafter amended.

"**Green Street**" shall mean a street that integrates LID drainage facilities to manage stormwater runoff within the public right-of-way.

"**Improvements**" means the design and construction of, but not limited to, roads, drainage facilities (i.e., storm drains, detention/retention ponds, bioswales, ditches, etc.), sidewalks, pedestrian trails, street lighting systems, utilities, and bridges.

"**Intersection**" shall mean the junction of two or more public roads.

"**L Intersection**" shall mean a two-legged, right-angled intersection. "L Intersections" only apply to Very Low Volume local roads.

"**Limited Areas of More Intensive Rural Development (LAMIRD)**" shall mean areas outside the urban growth area designated as existing rural residential communities or villages, areas of mixed-use activity, isolated areas of small-scale commercial/industrial activity, and historic towns pursuant to RCW 36.70A.070(5)(d). Mason County LAMIRDs are identified in Mason County Code.

"**Local Roads**" shall mean roads that are typically intended to provide connections to the arterial road system and provide direct access to properties. While arterial roads emphasize mobility, local roads typically provide relatively short trip distances and discourage higher speeds. The local road system is composed of Local Sub-collectors, Local Roads, Cul-de-sacs, and Very Low Volume roads.

"**Low impact development (LID)**" shall mean a stormwater and land use management strategy that strives to mimic pre-disturbance hydrologic processes of infiltration, filtration, storage, evaporation, and transpiration by emphasizing conservation, use of on-site natural features, site planning, and distributed storm water management practices that are integrated into a project design. LID is also known as green stormwater infrastructure or green stormwater solutions. LID is the preferred term used by the County.

"**Net developable area**" shall mean the site area after subtracting all rights-of-way, critical areas (including bald eagle habitat regulations) and their buffers, stormwater controls, recreational facilities, public facilities, community drain fields or other area-wide sanitary sewer facilities, and open space per Mason County Code.

"**Pavement Width**" shall mean the paved surface, including paved shoulder, or paved surface between curb, thickened edge, or gutter flow line.

"**Permeable Pavement**" shall mean pervious concrete, porous asphalt, permeable pavers, or other forms of pervious or porous paving material intended to allow passage of water through the pavement section. It often includes an aggregate base that provides structural support and acts as a stormwater reservoir.

"**Private Road**" shall mean a privately owned and maintained vehicular access provided by a tract, easement, or other legal means, typically serving five (5) or more dwelling units or potential dwelling units.

"**Project Engineer**" shall mean a qualified professional engineer licensed to practice in the State of Washington.

"**Public Road**" shall mean a County owned facility providing vehicular access, including the roadway and all other improvements located within the County right of way.

"**Right of Way**" shall mean all property in which the County has any form of ownership, interest, or title, and which is held for the purpose of public roads and associated features such as, medians, sidewalks, bicycle facilities, and public utilities. This definition applies regardless of whether any road exists thereon or whether it is used, improved, or maintained for public travel.

"**Road**" shall mean a facility providing public vehicular access including the roadway and all other improvements inside the right of way.

"**Road Approach**" shall mean a lane or set of lanes making up one leg of an intersection.

"**Road**", "**Street**" and "**Highway**" shall be considered interchangeable terms for the purpose of these Standards.

"**Roadway**" shall mean the pavement width plus any paved or non-paved shoulders for vehicular use.

"**Rural Areas**" shall mean areas so designated in Mason County Comprehensive Plan, and as implemented through community plans and area zoning, characterized by long-term low-density development.

"**Shoulder**" shall mean the paved or unpaved portion of the roadway outside the traveled way that is available for emergency parking or non-motorized use.

"**Traveled Way**" shall mean the part of the road made for vehicle travel excluding shoulders and parking.

"**Unmaintained Road,**" as used in this chapter, shall mean a road within county right of way which is accessible to public travel but is not maintained by the County.

"**Unopened Right of Way**" shall mean a County right of way existing by dedication, easement, or deed, but for which no vehicular roadway is evident nor has been constructed by the county or other parties through an approved county permitting process.

"**Urban Areas**" shall mean areas so designated in Mason County Comprehensive Plan, and as implemented through community plans and area zoning, characterized by commercial/industrial and denser residential development.

"**Utility**" shall mean an entity providing public service such as gas, electric power, telecommunications, stormwater management, water, sewer, or cable television, whether such company is privately owned or owned by a governmental entity.

"**Very Low-Volume Local Road**" shall mean a public or private roadway with an average daily traffic count of less than or equal to 400-vehicles.

1.9 Survey Monuments

Survey monuments within Mason County are essential to the precise location of all land divisions (parcels) and County right of way boundaries. The framework for actual physical reference points, referred to as monuments, has been previously established and must be preserved to secure ownership boundaries. Existing monuments consist of a system of known points that serve as the basis of reference for subsequent new and existing land subdivisions.

Mason County intends to help the citizens protect both government and roadway monuments. Working within the county right of way requires all individuals or corporations performing permitted construction or maintenance work comply with RCW 58.09.130 and WAC 332-120 to ensure monument preservation. The law safeguards monuments which are critical to the protection of private property rights and public infrastructure.

Preservation of these monuments must be perpetuated by a Licensed Professional Land Surveyor registered in the State of Washington.

2 Design Criteria

Project Engineers designing road improvements shall consider the road's functional class, design vehicles, design speed, design volumes, stormwater management and on-street parking requirements to make final design determinations. Roadway alignments should be laid out to minimize impervious surface areas, preserve native vegetation and trees, and incorporate LID stormwater management practices where feasible.

2.1 Functional Classifications

The first step in the design process is to identify the functional classification of the roadway. A description of the existing and projected adjacent land uses shall accompany the proposal for functional classification of new facilities. This description should answer questions such as:

Is the primary function mobility or access?

Is the roadway in an urban or rural environment?

Are schools nearby?

What is the expected pedestrian and bicycle activity?

Will the roadway serve an industrial or commercial site?

Roads are most effectively classified by their function, according to the character of service they are intended to provide. The primary functions of roads are to provide for mobility and access, and the degree to which these functions are provided is considered an integral part of classifying roads. The functional classification system creates a hierarchy of classified roads.

For example, a freeway provides a high degree of mobility but very limited access, available only at interchanges, which could be spaced several miles apart. Higher vehicle speeds and volumes are typical on these types of facilities and are, in fact, desirable. On the other hand, a local road in a residential neighborhood provides a high degree of access by way of numerous approaches to adjacent lots, and lower vehicle speeds and volumes are desired. Between these two extremes are the remainder of the roads, commonly called the arterial system, that provide both mobility and access. This diagram illustrates the priority function of three basic types of roadways.

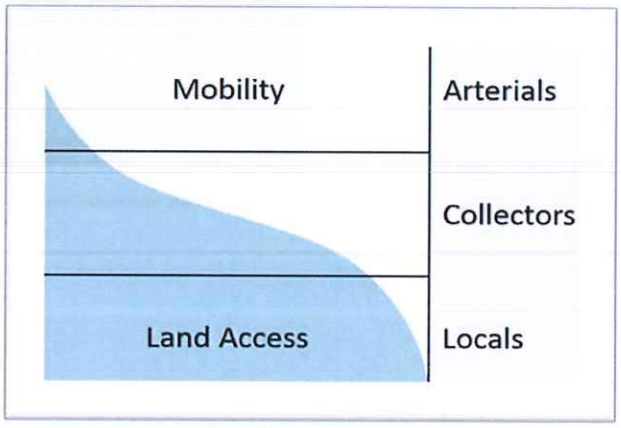

Roads are grouped into several different classifications for administrative, planning, and design purposes. For example, the classification system can be used for planning of new routes, improvements

to existing roads, planning for area development, and providing minimum design standards or criteria to encourage the use of the road as intended. The existing county arterial road system has been classified using the federally designated functional class system. This system is used by the federal government to distribute transportation funds to local and state municipalities.

The main considerations when classifying roads into functional groups are the:

1. travel desires of the public,
2. land access and service needs based on existing and expected land use, and
3. overall continuity of the system.

A classification system that organizes the various types of roads together into a logical pattern based on their functional class and assigns realistic improvement standards appropriate to each roadway class will promote the highest overall level of service and system efficiency.

Urban and rural areas have different characteristics as to density and types of land use. Consequently, the nature of road and highway networks are fundamentally different in these areas. These Standards provide for a separate classification of urban and rural functional road systems.

For purpose of these Standards, rural areas are the areas designated rural in the County's Comprehensive Plan. Likewise, urban areas are those designated urban in the same plan. In some cases, an urban road section may be warranted in areas outside the urban area.

Limited Areas of More Intensive Rural Development (LAMIRDs) are unique areas lying outside of the Urban Growth Area. They are existing rural residential communities or villages, areas of mixed-use activity, isolated areas of small-scale commercial/industrial activity and historic towns. Many of these zones have land use patterns that are urban in character. At the direction of the County Engineer, roadway projects within LAMIRDs may be required to provide an urban road section or other amenities that may be required by an adopted community plan.

The Mason County Comprehensive Plan's Transportation Section includes transportation plans for modes other than passenger vehicles. These modal plans are intended to overlay onto the functional classification system. For example, the Non-Motorized Facilities Plan overlays the functional classification system to identify roadways that should include bicycle facilities as a design element.

The functional classification system directly addresses all roads in unincorporated Mason County that are under the jurisdiction of Mason County. Determination of functional classification for new roads shall be made by the County Engineer. State highways under the jurisdiction of WSDOT are all legally designated arterials (RCW 46.61.195).

The functional classifications are defined below.

2.1.1 Federal Functional Classifications

The County arterial road system is divided into three federal functional classifications: Principal Arterial; Minor Arterial; and Major and Minor Collector.

2.1.1.1 Principal Arterials

Principal arterials provide a network of roads which can be identified as unusually significant to the area in which it lies in terms of the nature and composition of travel it serves. In urban areas, these facilities may be very limited in number and extent, and their importance may be primarily derived from the service provided to travel passing through the area. In urbanized areas, their importance also derives from service to rural-oriented traffic, but equally or even more important, from service for major travel movements within these urbanized areas.

Urban principal arterials serve the major centers of activity of metropolitan areas, the highest traffic volume corridors, and the longest trips. They carry a high proportion of the total urban area travel on a minimum of roadway mileage. Principal arterials carry the major portion of trips entering and leaving urban areas, as well as the majority of through movements bypassing the central city. They also serve significant intra-area travel, such as between central business districts and outlying residential areas, between major inner-city communities, or between major suburban centers. Frequently, principal arterials carry important intra-urban and inter-city bus routes. This network provides continuity both internally and for all rural arterials that intercept the urban boundary.

Rural principal arterials consist of a connected rural network of continuous routes. They provide the highest degree of mobility, serve major centers of activity, and are the highest traffic volume corridors between suburban centers and larger communities. They frequently carry important intra-urban and inter-city bus routes.

2.1.1.2 Minor Arterials

Minor arterials connect to and augment the principal arterial system, as well as connect to rural collector roads.

Urban minor arterials provide service for trips of moderate length at a somewhat lower level of mobility than principal arterials. They also distribute travel to smaller geographic areas. Urban minor arterials contain facilities that place more emphasis on land access. Such facilities may carry local bus routes and provide intra-community continuity but ideally do not penetrate identifiable neighborhoods.

Rural minor arterials provide service to corridors with trip length and travel density greater than those predominately served by rural collectors. They link cities and larger towns and form an integrated network providing intra-community continuity. A rural minor arterial is typically a continuous road with a direct, rather than meandering, alignment. Rural minor arterials are those routes whose design should be expected to allow for relatively high overall travel speeds with minimum interference to through movement. They

may carry local bus routes, but ideally do not penetrate identifiable neighborhoods.

2.1.1.3 Major and Minor Collectors

Collectors distribute trips from principal and minor arterials to the ultimate destination and collect traffic from local roads and channel it into the principal and minor arterial system.

Urban collectors differ from principal and minor arterials in that they may penetrate residential neighborhoods and provide direct land access. In the central business district and in other areas of like development and traffic density, urban collectors may include the road grid, which forms a logical entity for traffic circulation.

Rural collectors serve intra-county travel corridors linking nearby cities or towns with routes of higher classification. They may penetrate residential neighborhoods, provide direct land access, and distribute trips from the principal and minor arterials through the area to the ultimate destination.

2.1.2 Local Road Functional Classifications

The local road system consists of local sub-collectors and local roads. The local road system emphasizes land access in lieu of mobility. Local roads provide direct access to abutting land and provide service for trips of relatively short distances. Local roads should be designed for a relatively uniform low volume of traffic upon full development. Local roads should be designed to discourage excessive speeds and should minimize the necessity for traffic control devices. Internal roads with direct lot access should be discontinuous to discourage through traffic.

2.1.2.1 Local Sub-Collector

Local sub-collectors serve as primary access to a development from the adjacent road system, providing circulation within neighborhoods. They channel traffic to the collector system from the local road classification in residential neighborhoods. A local sub-collector usually serves one neighborhood or a combination of a few small developments, rather than interconnecting two or more larger neighborhoods. Abutting residences are oriented away from the local sub-collector and direct lot access is discouraged.

Local sub-collectors serve residential single family, multiple dwelling developments, commercial business office, professional activities, and industrial development.

2.1.2.2 Local Roads

Local roads provide direct access from abutting land to local sub-collectors. They are typically an internal subdivision road providing circulation within the subdivision. A local road is designed so that it can never become a higher classification roadway.

2.2 Design Vehicle

Roadway design shall consider the weight, dimensions, and operating characteristics of vehicles expected to travel on the roadway.

The road's geometry shall accommodate the physical dimensions and turning radius of selected "design vehicles." Critical features such as road radii at intersections and on curves are generally designed for the largest design vehicle likely to use the road with considerable frequency, or a design vehicle with special characteristics that shall be considered.

Design vehicles are grouped into three general classes.

1. **Passenger Vehicles:** Full-size, compacts, and subcompacts plus all light vehicles and delivery trucks (vans and pickups)

2. **Trucks:** Single-unit trucks, truck tractor-semitrailer combinations, and trucks or truck tractors with semitrailers in combination with full trailers

3. **Buses and Recreational Vehicles:** Single-unit buses, articulated buses, school buses, motor homes, and passenger cars of motor homes pulling trailers or boats.

Vehicles selected as the design vehicle for a roadway generally have the largest physical dimensions and widest turning radius of all vehicles in their types. AASHTO's "A Policy on Geometric Design of Highways and Streets," referred to hereafter as the "Green Book," defines standard characteristics for design vehicles within the general vehicle types.

The following minimum design vehicles are for each roadway functional classification (see AASHTO "Green Book" for vehicle turning paths and dimensions):

Principal Arterial	WB-40 (Intermediate Semi-trailer)
Minor Arterial	WB-40 (Intermediate Semi-trailer)
Collector	SU-40 (Single Unit Truck)
Local Sub-Collector	SU-30 (Single Unit Truck)
Local Road	SU-30 (Single Unit Truck)

The project engineer shall ensure that design vehicles can negotiate a roadway without encroaching on the opposing lane or leaving the traveled way.

2.3 Design Speed

Geometric design features of a road facility should be consistent with the design speed appropriate for the facility. The design speed for each road classification shall be as follows:

Principal Arterial, Minor Arterial, Collector	Posted or proposed speed limit
Local Sub Collector	Posted or proposed speed limit
Local Road	Posted or proposed speed limit, minimum 25 mph
Very Low Volume Local Road	Posted or proposed speed limit, minimum 20 mph

2.4 Design Volumes

The design volume is the traffic volume used in the design of a facility, representing the traffic expected to use the facility.

A. Local road sub-collector, and local road shall be designed using estimated Average Daily Traffic (ADT) projections. These projections shall be for a given time-period (in whole days), greater than one day but less than one year, divided by the number of days in that timeperiod.

B. For roadways with functional classifications of principal arterial, minor arterial, or collector, the Design Hourly Volume (DHV) concept is used. This is the 30th highest hourly volume of the future year chosen for design.

C. For design purposes, rural road or arterial DHV shall be 15 percent of ADT. For urban areas, DHV is 10 percent of the ADT. The County shall provide these volumes to the Project Engineer upon request.

2.5 Design Year

All roadways shall be designed to traffic volumes at the time of full build-out of the development. A reasonable yearly growth rate shall be applied to background traffic. The county engineer shall determine the growth rate used in the calculation.

2.6 Stormwater Management

All roadways shall have adequate crown, cross-slope, or longitudinal grade for water to run off the roadway.

All stormwater management elements of the roadway within the project boundaries shall be designed in accordance with the requirements of Mason County Code, *Stormwater Drainage*. Low impact development (LID) techniques are required to the extent feasible without causing flooding or erosion impacts.

See the Mason County Stormwater Design Manual for the applicable stormwater management and LID requirements.

2.7 Requirements for On-Street Parking

All on-street parking shall be in the public right of way.

A. Angled parking will only be allowed on local roads with approval of the County Engineer.

B. Preferred configuration for angled parking on bike routes is back-in parking.

C. Parking maneuver shall be designed so vehicle does not cross the road centerline.

D. Angled parking may require increased safety measures such as a wider traveled way that does not impair sight distance.

E. Angled parking stalls shall be designed to not encroach on the sidewalk.

F. Minimum parking dimensions for angled parking is 9 feet wide by 20 feet long.

In general, on-street parking reduces roadway capacity, reduces travel speeds, and can increase collision frequency. For these reasons, on-street parking on arterial roads is discouraged.

In residential developments, a minimum of 0.5 spaces per unit shall be provided as on street parking or in designated areas/lots outside the County right of way. The designated parking or areas/lots must be located so that each residential lot served is within 300 feet walking distance of the parking. On-street parking shall be parallel parking with a minimum of 8 feet in width by 20 feet in length for end spaces, and 23 feet in length for intervening spaces. In no case shall parking reduce the road width to less than twenty feet of clear and unobstructed width, unless approved by the Mason County Fire Marshal.

3 Design Elements

3.1 Vertical Alignment

The minimum lengths for vertical curves required to provide the minimum stopping sight distance are contained in AASHTO's "Green Book."

Sag vertical curve design shall be based on the visibility available on a non-illuminated roadway. The automobile headlight beam distance should be at a minimum equal to the stopping sight distance. If illumination is provided, the length of the sag vertical curve can be designed for driver comfort as outlined in AASHTO.

Crest vertical curve design shall be based on stopping sight distance for wet pavement. It should be emphasized that these lengths are minimum values based on design speed; longer curves are desired wherever practical.

The following criteria for establishing lengths of vertical curves should always be considered.

1. Topography and stormwater management
2. Passenger comfort
3. Travel speeds
4. Construction costs
5. General appearance
6. Illumination

All grade changes greater than 1 percent shall be connected by a vertical curve. Grade breaks are not permitted at the beginning of vertical curvature, at the end of vertical tangency, nor in close proximity to another vertical curve or grade break.

Minimum vertical curve lengths can be determined by multiplying the algebraic difference in tangent grades by the K values found in AASHTO. The design of crest and sag vertical curves is related to design speed and is important for rural roads with higher driving speeds. AASHTO's "Green Book" is the best source of information for the analysis of vertical and horizontal curvature.

Innovative techniques are encouraged to preserve habitat, retain trees, and reduce the creation of impervious area. Generally, roads should run perpendicular to contour lines when the land slopes at less than 10 percent, and parallel to contour lines when slopes exceed 10 percent.

3.2 Sight Distance

Sight distance is the length of roadway visible to the driver. Passing sight distance is pertinent only on two-lane, two-way roadways. For paved roads with striped centerlines, appropriate passing and no passing zones are required to indicate to drivers where safe passing maneuvers are permitted.

The calculation of sight distance for stopping, decision, passing, and intersections is discussed in AASHTO's "Green Book" and the WSDOT Design Manual.

Intersections should be planned and located to provide as much sight distance as possible. At a minimum, excluding private approaches, the intersection sight distance shall provide sufficient sight distance for the driver on the minor roadway to enter or cross the major roadway without requiring approaching traffic to reduce speed as discussed in Chapter 4.

3.2.1 Stopping Sight Distance

Stopping Sight Distance is the sum of two distances:

(1) brake reaction distance, which is the distance traversed by the vehicle from the instant the driver sights an object necessitating a stop to the instant the brakes are applied; and

(2) braking distance, which is the distance needed to stop the vehicle from the instant brake application begins, as shown in Table 3-1.

Stopping sight distance shall be available throughout all horizontal and vertical curves. This distance is dependent on the height of the driver's eye above the road surface, the specified object height above the road surface, and the height and lateral position of sight obstructions within the driver's line of sight. Values are based on an object height of 2.0 feet and a driver's eye height of 3.5 feet. The effects of grade shall be accounted for through the use of a correction factor for grades steeper than 3 percent.

In situations where the stopping sight distance is not clearly adequate, the County Engineer shall require the Project Engineer to prepare a stopping sight distance diagram. The diagram shall include appropriate field measurements, and any proposed counter measures. The diagram and measurements shall be stamped and signed by the Project Engineer and submitted for review prior to the approval of the construction plans.

Table 3-1: Minimum Stopping Sight Distance

Design Speed (mph)	Stopping Sight Distance (feet), Level Roads	Stopping Sight Distance (feet), Grades					
		Downgrade			Upgrade		
		3%	6%	9%	3%	6%	9%
20	115	116	120	126	109	107	104
25	155	158	165	173	147	143	140
30	200	205	215	227	200	184	179
35	250	257	271	287	237	229	222
40	305	315	333	354	289	278	269
45	360	378	400	427	344	331	320
50	425	446	474	507	405	388	375

Source: A Policy on Geometric Design of Highways and Streets (latest edition), AASHTO

Note: Distances were calculated using friction factor for WET pavement

3.2.2 Decision Sight Distance

In some cases, stopping sight distances may not be long enough. Greater distances may be needed at locations where drivers must make complex or instantaneous decisions or where information is difficult to perceive. Refer to AASHTO's "Green Book" for decision sight distances at locations where additional margin of error would be prudent.

3.3 Grade

Acceptable grade to assure proper emergency access, sight distance, and stormwater management is an important consideration for the design of a roadway.

Tolerable maximum grades shall vary with road use. A steeper grade may be more acceptable on an urban residential road than on a rural road serving heavy trucks.

Intersections on steep grades should be avoided whenever possible, especially in areas with recurring snow and ice problems.

Ease of access for emergency vehicles is also to be considered when establishing grades. Centerline slopes greater than 12 percent require approval of the Fire Marshal.

For rural projects, AASHTO's "Green Book" includes tables of maximum grades related to design speed and terrain. The maximum centerline grade on any new or reconstructed road shall not exceed the following:

Table 3-2: Maximum Centerline Grade

Arterials		**Local Roads**	
Principal	8%	Local Sub-collector	12%
Minor	8%	Local Road	12%
Collector	10%	Cul-de-sac Bulb	6%

With curbed roadways (including asphalt tilt-up), longitudinal grades shall be provided to facilitate surface stormwater management. The minimum grade along a curb line shall be no less than 1 percent. Flat areas should be avoided to the maximum extent possible to preclude ponding.

Particular attention should be given to the design of stormwater inlets and their spacing to keep the spread of water on the traveled way within the limits required by the Mason County Stormwater Design Manual. Roadside channels and median swales frequently need grades steeper than the roadway profile for adequate stormwater management.

3.4 Horizontal Alignment

Horizontal alignment consists of tangents and horizontal curves. Horizontal and vertical alignments are the two primary design control elements for the design of a roadway.

The road construction centerline shall match the right of way centerline unless otherwise approved by the County Engineer.

Horizontal alignments should be laid out to minimize impervious surfaces, preserve native vegetation and trees, and incorporate LID facilities to the extent feasible. The alignment should be as direct as possible from the beginning to the end of the roadway and still blend with the topography, while preserving developed properties, community values, desired travel speeds, and environmental values.

To maintain the desired speed, horizontal curves may be superelevated. Superelevation is the rotation or banking of the roadway cross-section to overcome forces that act on a vehicle traversing a curve. The design superelevation rate for all county roads shall be e_{max} = 8 percent. Super-elevations in urban areas should be kept to a maximum of 4 percent. A maximum of 8 percent superelevation may be used for design of improvements to existing arterials, or to meet unique terrain and right of way conditions. For low speed urban roads, the AASHTO table for minimum radii and superelevation for low-speed urban streets should be used. Superelevation run-off lengths on arterials or local access roads shall be calculated in accordance with the AASHTO *Green Book*. When using the short curve radii for 20 mph

design speed, it may be necessary to provide a wider lane to accommodate the Single Unit Truck design vehicle. Depending on design speed, curves with larger radii should be constructed with a normal crown section of 2 percent. Curves with smaller radii should be super-elevated in accordance with the appropriate super-elevation rates found in AASHTO.

On local roads with 400 or fewer AADT where design speeds are in the 20-25 mph range, the use of short radius curves as shown in AASHTO *Geometric Design of Very Low Volume Local Roads* is acceptable. Short-radius curves and "L Intersections" may be tolerated, and super-elevation may not be necessary.

The designer shall ensure that the horizontal alignment accommodates the required design vehicles without encroaching on the opposing lane or leaving the roadway. Widening the travel lanes may be required to ensure that this requirement is met. Conventional turning templates or computer methods are routinely used for analysis of turning movements.

Design speed, curvature, super-elevation, and sight distance are based on formulas, experience, and good design practice.

3.5 Right of Way

The right of way width for any roadway shall be sufficient to accommodate all features of the road. Roadway features are defined as elements necessary for the construction, operation, and maintenance of the roadway. These include, but are not limited to, driving lanes, auxiliary lanes, bicycle lanes, shoulders and sidewalks, signs, ditches, LID facilities, slopes, and any utilities that may be expected to be placed within the right of way.

The minimum right of way width for a local road and local sub-collector that does not require any future widening shall be 40 feet, provided that a non-exclusive utility easement is provided abutting the right of way on one or both sides so that the total width of right of way and easement is no less than 60 feet. Where cut or fill slopes exceed the minimum prescribed right of way, slope maintenance easements may be provided in lieu of providing additional right of way.

3.6 Pavement

Paving and sub-grade material for local roads shall be a minimum of 3-inch compacted depth of HMA, 3-inch compacted depth of crushed surfacing top course, and 6-inch compacted depth of crushed surfacing base course. If there is evidence of instability in the sub-grade, the soil shall be sampled and tested sufficiently to establish a pavement design that supports the proposed construction. Remedial measures may include a stronger paved section, strengthening the sub-grade by providing additional fractured aggregate, installing geotextile material, more extensive stormwater management, or a combination of such measures.

Paving and sub-grade material for arterial roads shall be designed using currently accepted methodology. The design shall consider the load bearing capacity of the soils and the traffic-carrying

requirements of the roadway. Plans shall be accompanied by a pavement design based on soil strength parameters reflecting actual field tests and traffic loading analyses. The analysis shall consider the traffic volume and axle loading. The solution shall include the type and thickness of roadway materials and the recommended method of placement. The soils test report and the resulting pavement design shall be subject to review and approval by the County Engineer.

All concrete curb and gutter shall be constructed prior to paving.

Typical roadway pavement sections are provided in the following figures:

Figure 3-1: Typical Urban Roadway Section – Cement Concrete Barrier Curb, Gutter, and Sidewalk

Figure 3-2: Typical Rural Roadway Section – Gravel Shoulders and Open Drainage

Figure 3-3: Typical Rural Roadway Section – Thickened Edge Curb

Permeable pavements shall be permitted in County rights of way on a case-by-case basis where soils, site conditions and traffic are compatible.

The County Engineer may require private roads and driveways serving 4 or more dwelling units or potential dwelling units to be chip sealed or paved as a condition of subdivision or platting approval. (Figures 4-6 and 4-7).

3.6.1 Road Widening/Adding Traveled Way to Existing Roads

When an existing asphalt paved road is to be widened, a clean vertical edge on the existing pavement shall be provided for joining to the new asphalt. The clean vertical edge shall be positioned to provide three feet of compactable area within the travel way. The compactable area is measured from the edge of curb, if present, or edge of travel lane. After placement of the new pavement section, the joint shall be sealed with paving asphalt AR-4000W for tack coat. If the joint falls in the wheel track a complete lane overlay shall be required.

The normal roadway crown slope for new construction is 2 percent. When widening of an existing road, a maximum of 4 percent crown slope is permitted. Grinding and/or overlaying as applicable shall be required if the cross slope exceeds 4 percent.

When an existing shoulder is required to become part of a proposed traveled way, a pavement evaluation shall be performed. This evaluation shall analyze the structural capacity and determine any need for improvement. Designs based on the evaluation are subject to review and approval by the County Engineer.

The responsibility for any shoulder material thickness improvement shall be considered part of the requirement for roadway widening. The shoulder width, as a minimum, shall be replaced to the same width and material as existed before widening began.

Where widening of a roadway result in existing catch basins being located within the traveled way, a plan for adjustment and/or relocation shall be provided.

3.7 Roadway Feature Design Values

Chapter 42.5 Washington State Department of Transportation, Local Agency Guidelines (M 36-63.26) presents minimum roadway feature design values for each functional classification, as shown in Tables 3-3 and 3-4.

Table 3-3: Local Roadway Design Values

Local Roadway Features	Urban		Rural	
	Local Sub-collector Urban [c]	Local Road Urban [c]	Local Sub-collector Rural	Local Road Rural
Lane Width [a][b][f]	13 ft	10 ft	10 ft	10 ft
Sidewalk, both sides or Shoulder Width	5 ft [e]	5 ft [e]	4 ft [d]	3 ft [d]
Ditch Slope (in slope)	N/A	N/A	2H:1V	2H:1V

Notes:

(a) For curbed sections, measure distance from face of curb to road centerline. For shouldered sections, measure distance from inside edge of shoulder to road centerline.

(b) Residential areas where on-street parking is required, provide 8 additional feet.

(c) Curbed section is appropriate for urban setting.

(d) When guardrail is necessary, provide 2 feet of widening or longer posts to ensure lateral support.

(e) When sidewalk is required as a condition of development approval.

(f) Additional width may be necessary at curves.

Table 3-4: Design Values for Arterial Roadway Features

Design Standards	Principal Arterial			Minor Arterial				Collector				
	Curbed [4]	Shoulder		Curbed [4]	Shoulder			Curbed [4]	Shoulder			
	DHV All	**DHV** < 200	**DHV** ≥ 200	**DHV** All	**DHV** < 100	**DHV** 100-200	**DHV** ≥ 201	**DHV** ≥ 400	**ADT** 400-750	**ADT** 751-1000	**DHV** 100-200	**DHV** ≥ 201
Roadway Width [1][2][7][9]	24 ft	36 ft	40 ft	24 ft	32 ft	36 ft	40 ft	24 ft	26 ft	28 ft	34 ft	40 ft
Lane Width: A. Exterior [2][7]	12 ft [11]	12 ft	12 ft	12 ft [11]	12 ft	12 ft	12 ft	12 ft [11]	10 ft	10 ft	11 ft	12 ft
B. Interior Thru [2]	11 ft.	11 ft	11 ft	11 ft	11 ft	11 ft	11 ft	11 ft	10 ft	10 ft	11 ft	11 ft
C. 2-Way Left Turn [2]	11 ft	11 ft	11 ft	11 ft	11 ft	11 ft	11 ft	11 ft	10 ft	10 ft	11 ft	11 ft
D. Exclusive Turn [2]	11 ft	11 ft	11 ft	11 ft	11 ft	11 ft	11 ft	11 ft	10 ft	10 ft	11 ft	11 ft
E. Parking [2]	10 ft [3]	—	—	10 ft [3]	—	—		—	— [5]	10 ft [3]	—	—
F. Bicycle Lane (as required)	AASHTO Guide for the Development of Bicycle Facilities, Mason County Non-motorized Plan, Chapter 3 of this Standard.											
Shoulder Width [2][6][7][9]	N/A	6 ft	8 ft	N/A	4 ft	6 ft	8 ft	N/A	3 ft	4 ft	6 ft	8 ft
Sidewalk Width (minimum) [9]	6 ft	—	—	6 ft	—	—	—	6 ft	—	—	—	—
Ditch Slope (in-slope)	Slopes steeper than 4H:1V should only be used when achieving a 4H:1V slope is impractical.											
Clear Zone/Side Slopes	AASHTO [10]											

(1) For curbed, distance from face of curb to face of curb. For shouldered, distance from paved edge to paved edge of shoulder.

(2) May be reduced to minimum allowed by AASHTO

(3) 8 feet may be acceptable when the lane is not likely to become a traffic lane in the foreseeable future.

(4) Curbed section is appropriate for urban setting.

(5) Industrial areas 8 feet to 10 feet. Residential areas 7 feet to 10 feet.

(6) When guardrail is necessary, provide 2 feet of widening or longer posts to ensure lateral support.

(7) For roads with traffic volumes of less than 400 ADT, the low volume road and street standards may be used.

(8) Federal functional classification defined by WSDOT.

(9) For guidance for one-way streets, see AASHTO and the current uniform fire code.

(10) When using AASHTO guidance for clear zone determinations, the designer should take into account all AASHTO materials relating to clear zone and project circumstances.

(11) Provide additional 2 feet (14-feet minimum lane width) if bicycle lanes are not provided

Note: Design Hourly volume (DHV). The DHV is generally the 30th highest hourly volume (30 DHV) of the future year chosen for design. On the average rural road or arterial, DHV is about 15 percent of ADT. For urban areas, DHV is usually between 8 to 12 percent of the ADT or AADT.

3.7.1 Cul-de-sacs

Whenever a cul-de-sac dead end road extends more than 150 feet measured from the centerline of the intersecting road to the farthest extent of surfaced traveled way, a widened "bulb" shall be constructed as follows:

A. Minimum public right of way diameter across the bulb section shall be 100 feet. The right of way diameter may be reduced, provided utilities and necessary stormwater management are accommodated on permanent easements within the development.

B. Minimum diameter of surfacing across the bulb shall be 90 feet of paving for both curb type and shoulder-type road, to include 84 feet of paving and 3-foot shoulders with compacted crushed surfacing material. Public roads in areas zoned Commercial or Industrial shall have a minimum roadway diameter of 100 feet. When on-street parking is required, additional paving may be required, per County Engineer.

C. An optional cul-de-sac island, if provided, shall have a minimum diameter of 20 feet and shall be designed to accommodate the design vehicle. The island shall be grassed or landscaped and shall be maintained by the adjoining property owners or community association. Where on-street parking is required, parking adjacent to or in a cul-de-sac island is not permitted.

D. Where required on cul-de-sacs, sidewalks shall at a minimum be constructed on one side and on the bulb, terminating on a property line at or near half-way around the bulb.

E. A cul-de-sac shall not be longer than 700 feet measured from the centerline of the intersecting road to the center of the bulb section. Proposed exceptions to this rule shall be considered by the County Fire Marshal based on pertinent traffic planning factors such as topography, sensitive areas, and existing development. The cul-de-sac length may extend to 1,000 feet if 50 or fewer potential lots are to be served and there is provision for emergency turnaround near mid-length.

F. The County Engineer may require an off-road walkway or an emergency vehicle access to connect a cul-de-sac at its terminus with other roads, parks, schools, bus stops, or other pedestrian traffic generators.

G. If a road temporarily terminates at a property boundary and is longer than 150 feet from the centerline of the intersecting road, a temporary bulb shall be constructed near the property boundary. The paved bulb shall be the appropriate diameter. Removal of the temporary cul-de-sac shall be the responsibility of the developer who extends the road.

3.7.2 Two-Way Single-Lane Roads

Provided that the established criterion for a technical deviation is accepted by the County Engineer, two-way single-lane roads may be used in physically constrained locations when the construction of a two-lane road is not practical. Two-way single-lane roads may be constructed in areas serving residential plats but shall not be considered for business or commercial use.

A. Two-way single-lane road cross sections are allowed only on local access roads where traffic volumes are less than 100 vehicles per day and the length is less than one half mile. Two-way single-lane roads are designed to operate at low speeds, typically no more than 25mph.

B. Two-way single-lane roads shall be provided with a 20-foot unobstructed width paved to a minimum of 12 feet. Where the minimum unobstructed width cannot be met, a variance from the Fire Marshal is required.

C. Design values of stopping sight distance for two-way single-lane roads should be twice the stopping sight distance for a comparable two-lane road. Turnouts shall be provided at a minimum of 500-foot intervals, or less if a traffic study indicates that more turnouts are necessary after considering topography, horizontal and vertical alignment, and visibility. In some cases, particularly where increased sight distances are impractical, widening of the roadway at crests should be considered.

D. When a two-way single-lane road approaches a normal county road, the driving surface shall be a minimum of 20 feet in width with a minimum return radius of 35 feet. The full width driving surface shall be maintained for a minimum of 50 feet before tapering back to a two-way single-lane road section at a taper of 1:25 for a symmetricaltaper.

E. All county maintained two-way single-lane roads shall be paved to full depth per county paving standards for local access roads.

3.7.3 Shoulders

All shoulders on arterials and collectors shall be paved full width. All local roads shall be compacted gravel or paved.

Any roadway designated a bike route shall have a minimum of 5-foot paved shoulders. The paved portion of the shoulder shall be adjacent to the paved travel lane.

3.7.4 Curbs

All urban curbs shall be concrete construction, 6-inch vertical face with a minimum 12-inch gutter (see WSDOT Standard Plans, Cement Concrete Traffic Curb and Gutter).

Rural asphalt thickened edge sections may be used to channel stormwater. Thickened edge sections will be in addition to the minimum shoulder width; 18-inch run with 4-inch rise (see Figure 3-3).

3.7.5 Non-Motorized Facilities

Mason County encourages a variety of mobility options supporting alternatives to automobile travel. These facilities increase non-motorized transportation opportunities, improve the beauty and health of the environment, and provide for outdoor recreation. Enhanced bicycle and walking facilities offer travel options for those who are unable to drive or choose not to drive for all or some trips.

3.7.5.1 Sidewalks

Sidewalks are constructed of concrete and are raised and located adjacent to curbs or separated from the curb by a linear planting strip. Planting strips shall be a minimum of 4 feet wide.

On collector and arterial roads, the sidewalk width can vary depending on the location.

Sidewalks may be required as part of road improvements where there are anticipated or existing origins and destinations within acceptable pedestrian travel distances that may generate walk trips. These include but are not limited to schools; parks; shopping areas; medical facilities; social services; housing; community and recreational centers; and transit and park-and-ride facilities.

Where sidewalks are required, sidewalk and curb ramps shall meet the requirements of the Americans with Disabilities Act (ADA). Separate curb ramps shall be provided for each direction of permitted pedestrian travel.

3.7.5.2 Bikeways

Bikeways are a generic term for any road, path, or way which is specifically designated for bicycle travel, regardless of whether such facilities are designated for exclusive use of bicycles or are to be shared with other transportation modes.

3.7.5.3 Shared use Path

Shared-use paths are physically separated from motorized vehicular traffic by an open space or barrier. They are located within the highway right of way or within an independent right of way.

Shared use paths may be utilized by pedestrians, skaters, wheelchair users, joggers, and other non-motorized users. The minimum width for a two-way combined bicycle and pedestrian facility is 10 feet paved. For areas of anticipated high-volume use, the minimum is a 12-foot width.

Sixty bicycles per hour is considered high volume. Twenty pedestrians per hour in peak hour conditions is also high volume.

3.7.5.4 Bicycle Lane

A bicycle lane is a portion of a roadway which has been designated by striping, signing, and/or pavement markers for the preferential or exclusive use of bicycles. Bicycle lanes are for bicycles only and should not be used by pedestrians. For curbed roadways, the minimum lane width is 5 feet from face of curb. Bicycle lanes along roadways without curbs shall maintain a minimum width of 5 feet.

3.8 Clear Zone and Roadside Features

The term "clear zone" is used to designate the unobstructed, traversable area beyond the edge of the traveled way provided for the recovery of errant vehicles.

The intent is to provide roadways with as much clear zone area as practical. The clear zone includes shoulders, bike lanes, and auxiliary lanes.

Features that a vehicle might encounter when it leaves the roadway, and which should be evaluated for mitigation include side slopes, fixed objects, and water hazards. Mitigation measures include removal, redesign, or relocation of features, or other measures to reduce impact severity or otherwise shield or delineate these features.

Clear zone evaluation shall conform with AASHTO guidelines and the clear zone values in Table 3-4 used to provide a minimum target value for roadway design. These values are applicable to new construction.

Table 3-5: Clear Zone Requirements

Posted Speed	Design ADT	Fill Slopes (H:V)			Cut Slopes (H:V)		
		6:1 or flatter	5:1 to 4:1	3:1	3:1	4:1 to 5:1	6:1 or flatter
≤ 40 (mph)	Under 750	7-10	7-10	**	7-10	7-10	7-10
	750-1500	10-12	12-14	**	12-14	12-14	12-14
	1500-6000	12-14	14-16	**	14-16	14-16	14-16
	Over 6000	14-16	16-18	**	16-18	16-18	16-18
45-50 (mph)	Under 750	10-12	12-14	**	8-10	8-10	10-12
	750-1500	14-16	16-20	**	10-12	12-14	14-16
	1500-6000	16-18	20-26	**	12-14	14-16	16-18
	Over 6000	20-22	24-28	**	14-16	18-20	20-22

* Where a site-specific investigation indicates a high probability of continuing crashes or such occurrences are indicated by crash history, the designer may provide clear zone distances greater than shown in Table 3-4. Clear zones may be limited to 30 feet for practicality and to provide a consistent roadway template if previous experience with similar projects or designs indicates satisfactory performance.

** Since recovery is less likely on the unshielded, traversable 3H:1V slopes, fixed objects should not be present in the vicinity of the toe of these slopes. Recovery of high-speed vehicles that encroach beyond the edge of shoulder may be expected to occur beyond the toe of slope. Determination of the width of the recovery area at the toe of slope should take into consideration right of way availability, environmental concerns, economic factors, safety needs, and crash histories. Also, the distance between the edge of the through traveled lane and the beginning of the 3H:1V slope should influence the recovery area provided at the toe of slope.

Source: Roadside Design Guide (latest version), AASHTO

Establishing clear zones based on Table 3-4 in urban areas with restricted environments may not be practical. Urban environments are characterized as having sidewalks, landscaping, transit shelters, poles or street furniture located adjacent to curbs. Roadways in urban environments typically have lower speeds and in some cases on-street parking. Designing a clear zone for a roadway in an urban restricted environment shall be based on guidance from AASHTO's "Roadside Design Guide".

3.8.1 Side Slopes

Side slopes on local roads shall be constructed no steeper than 2H:1V. Side slopes on arterials shall be no steeper than 3H:1V for cut slopes and 4H:1V for fill slopes. Steeper slopes may be

approved by the County Engineer when accompanied with a geotechnical report by a qualified professional engineer showing that the steeper slopes will be stable.

Side slopes shall be stabilized by grass sod or seeding or by other planting or surfacing materials as required by the Mason County Code and Washington State erosion and stormwater control standards.

3.8.2 Mailboxes

A. No mailbox or newspaper delivery box, hereinafter referred to as mailbox, shall be allowed to exist on Mason County right of way if it interferes with the safety of the traveling public or the function, maintenance, or operation of the County Road system. The location and construction of mailboxes shall conform to the regulations of the U.S. Postal Service. In addition, the installation of all mailboxes located within the clear zone and on Mason County right of way shall meet the following requirements:

B. The maximum size post allowable is 4 inches by 4 inches for a wooden post and 2 inches in diameter for a standard steel or aluminum pipe post. The post shall be embedded no more than 24 inches into the ground. A metal post shall not be fitted with an anchor plate, but it may have an anti-twist device that extends no more than 10 inches below the ground surface.

C. Mailbox supports shall be separated a distance at least equal to three-fourths of their heights and preferably their full heights above ground.

D. Multiple mailbox installations shall meet the same criteria as single mailbox installations.

E. The Neighborhood Delivery and Collection Box Unit (NDCBU) is a specialized type of multiple mailbox installation that generally consists of a cluster of 8 to 16 locked boxes mounted on a pedestal or within a framework. NDCBU's are not allowed within the clear zone on Mason County right of way, except on very low-volume local roads. Refer to AASHTO's "Roadside Design Guide" or the WSDOT/APWA Standard Plans for details of acceptable mailbox assemblies.

F. A mailbox installation not conforming to these standards shall be considered an unauthorized encroachment into County right of way. The owner of a problematic mailbox shall be notified in writing that their mailbox does not comply with Mason County Standards. At the discretion of Mason County, based on an assessment of the hazard to the public, the owner of the mailbox shall be granted not less than 24 hours or more than 14 days to remove an unacceptable mailbox. After the specified period has expired, the unacceptable mailbox shall be removed by Mason County at the owner's expense.

3.8.3 Traffic Barriers

Barrier installations shall conform to WSDOT Design Manual and WSDOT/APWA Standard Plans. Recommendations for barrier installations shall conform to AASHTO standards.

3.8.4 Retaining Walls

Retaining walls within the right of way shall be designed and constructed in accordance with the current WSDOT Design Manual, WSDOT/APWA Standard Plans, and WSDOT/APWA Standard Specifications. Walls having a vertical height over 4 feet measured from the bottom of the footings to the top of the wall shall be designed and be stamped by a qualified professional engineer.

3.8.5 Street Trees

Except for landscaped medians and vegetated LID stormwater management facilities, maintenance of landscape features located within County right of way shall be the responsibility of the fronting property owner. This includes watering, mulching, plant replacement and required pruning.

While Mason County encourages the planting of trees along public streets, some species have aggressive root systems which may cause damage to adjacent curbs, gutters, sidewalks, and utilities. In addition, some species are inappropriate for use because they block visibility, are susceptible to wind damage or drop fruit or debris.

Trees located in the right of way shall be planted to the following standards:

A. The tree shall not be allowed to grow to over 4-inch diameter at 6 inches above the ground.

B. 5 feet from underground utility lines

C. 15 feet from power poles

D. 10 feet from approaches - foliage shall not be allowed to restrict driver's visibility and branches shall not be allowed between a height of 3 feet and 7 feet.

E. 20 feet from streetlights or other existing trees

F. 30 feet from street intersections – a sight triangle should be evaluated when trees are planted near intersections.

G. Trees planted near roads, sidewalks, or approaches will have acceptable root barrier to preclude root damage to pavement.

Where these standards cannot be met, plantings in the right of way are limited to shrubs having a mature height of 3.5 feet.

Prior to any digging within County right of way, an underground locate should be requested by calling 800-424-5555.

Mason County is not responsible for private irrigation systems located in right of way unless the installation is performed under a permit to work in County right of way and all conditions of permit approval are met.

4 Access and Intersections

4.1 Access Control

Access points to County roads are classified as private approaches or intersections.

Intersection design criteria defined in the current edition of the AASHTO *Green Book*, WSDOT *Design Manual* and the *Manual on Uniform Traffic Control Devices* shall be used whenever a public roadway intersects another public road, or a private approach intersects a public road. Intersection location, spacing, and design are fundamental to managing roadway access and preserving roadway capacity. The functional classification of a roadway addresses the appropriate level of access control.

The County Engineer may require the Project Engineer to furnish an access plan that the County can use to assess the impact of the proposed access on the County Road system. For intersections with three or more lanes, the Project Engineer shall prepare signing, striping, and traffic channelization plans.

Access points shall be designed to provide adequate sight distance in both directions on the public roadway being accessed. The general design criteria shown below are minimum guidelines only and may be modified to account for traffic volumes, topography, design speed, design vehicle requirements, and other conditions.

The following general design criteria for roadway intersections and approaches shall apply:

1. Roadway intersections shall be located a sufficient distance from all curves to provide proper sight distance for vehicles on the intersecting road and on the through road.

2. Multi-leg intersections (i.e., those with more than four legs) are not permitted within local road networks. In local road Networks, "T" intersections are encouraged. For arterial access, four-leg intersections are encouraged.

3. Where approaches are on opposite sides of the road, avoid positioning them where opposing left turning movements conflict with each other, especially in two-way left-turn lanes.

4. Roundabout intersections taking the place of standard intersections shall be designed in accordance with current AASHTO, FHWA and/or WSDOT standards and guidelines.

5. To preclude encroachment on travel lanes, radii and any taper for right-turn entry and exit should be consistent with the design vehicle's turning path requirements.

6. Whenever a property has potential access from two or more roads, the County Engineer may refuse access to the higher classified road.

7. Whenever a potential feasible access exists to any property from both a public road and private easement, the County Engineer may refuse new access to the publicroad.

8. New access locations internal to the platting of property shall be unified whenever possible to create the fewest number of access points onto a County Road. All subdivision lots shall access from interior roads only. Lots of record in existing formal plat subdivisions, short plats, and large lots not served by a minor or major approach shall be permitted one residential approach.

9. Access to corner lots shall be from the lesser-classified road at the greatest distance possible from the intersection.

10. The number of intersections shall be minimized as much as possible, particularly as the classification of the affected roads increases. Intersection spacing should be maximized wherever possible. Developments shall be limited to one ingress/egress per 300 lineal feet along a public arterial but may be required at greater intervals based on a traffic analysis.

11. All access gates shall be installed so that no portion of the gate, open or closed, or gate appurtenances such as keypad islands, turnaround areas, etc. shall be located within County right of way. All gates shall meet the requirements of Mason County Code and require the approval of the County Fire Marshal and the local Fire District.

    (a) Gates installed across a shared-access facility, private road, tract, or easement serving more than 50 ADT shall have a turnaround located in front of the gate to accommodate a SU vehicle and the ingress shall have two travel lanes.

    (a) Gates serving a single-family residence, storm pond facility or agricultural area shall be set back from the edge of traveled lane a minimum 30 feet. All other gates shall be set back a minimum of 50 feet.

12. A minimum of two access points opened to traffic at all times, separated by no less than half the diagonal of the property or area served, shall be required for developments that generate more than 1,000 ADT (or 100 single family homes) unless other mitigating measures are approved by the County Fire Marshal and the County Engineer.

13. Preserve native vegetation and trees to the maximum extentfeasible.

The number and location of intersections may be more restrictive than described herein if deemed necessary by the County Engineer. The County Engineer shall base the determination on existing and projected traffic volumes, channelization, signalization, and turning movements generated by the proposed project.

4.1.1 Intersection Functional Area

Access points and intersections are a major source of accidents and congestion. Therefore, the spacing of intersections and approaches is a critical element in the planning and design of roadways.

Access spacing can be especially challenging where development takes place on existing roads where land has already been subdivided. While property owners have the right to reasonable access, roadway users have the right to freedom of movement and safe roads. An objective of these Standards is to manage access to land developments while preserving the safe flow of traffic on County roads. Numerous studies have shown that sound access management reduces accidents and improves the operation of roads.

New access points or intersections should not be located within the functional area of an existing intersection. For purposes of these Standards, an intersection's functional area on the approach leg includes the 95 percent queue length plus the minimum stopping sight distance measured from the stop line. Departure leg spacing shall be minimum stopping sight distance for arterials and 50 feet for local roads measured from the tangent curb line of the cross traffic.

4.2 Roadway Intersections

Roadway intersection guidelines encourage the preservation of capacity and safe operation of roadways. The following subsections provide the guidelines for roadway intersection location and design.

4.2.1 Angles

An important intersection design characteristic is the intersection angle. The intersection angle is the angle between any two intersection legs. The preferred angle is 90 degrees. The allowable intersection angles are between 75 and 105 degrees. An approved deviation from the County Engineer is required when the following intersection configurations cannot be avoided.

1. Intersections with offset legs
2. Intersections with more than four legs
3. Tee intersections where the major traffic movement turns.
4. Wye intersections that are not a one-way merge or diverge
5. Angle-points or short radius curves within the intersection
6. Other non-standard intersection designs

4.2.2 "L" Intersections

On very low volume roads where ADT ≤ 400, an "L" intersection (two-legged, right-angled intersection) may be desirable to address unique site constraints or planning objectives. Because there are only two legs, these do not meet the true definition of an intersection and generally do not require traffic controls.

Nevertheless, "L" intersections are commonly used throughout the Country and meet the objectives of safety and efficient design. "L" intersections shall be designed in accordance with the intersection standards in Section 4. Refer to Figure 4-1 for the required geometry and design considerations.

4.2.3 Corner Radii

The geometric design of an intersection requires identifying and addressing the needs of all intersection users. For the design of right-turn corners, there may be competing design objectives when considering the turning requirements of the design vehicle and the crossing requirements of pedestrians. To reduce the operational impacts of large trucks, right-turn radii should be designed so that the truck can complete its turn without encroaching on the adjacent lanes at either the entrance or exit legs of the curve. This results in larger corner radii, which increases pavement area and higher vehicle turning speeds.

The design elements of each intersection, including all radii, shall be based on expected volumes by direction of arrival and by expected vehicle characteristics.

For local roads intersecting local roads, the minimum face of curb line radii required is 35 feet. The designer shall ensure that corner radii accommodate required design vehicles without encroaching on the opposing lane or leaving the traveled way. Widening the travel lanes may be required to ensure that this requirement is met. Conventional turning templates or computer methods are routinely used for analysis of turning movements.

With approval from the County Engineer, partial lane encroachment may be allowed during turning movements on very low-volume roadways to reduce pavement area, or to allow curb bulb-outs to provide for roadway bioretention and/or promote pedestrian safety by reducing crossing distances.

4.2.4 Intersection Control

Sight distance shall be provided at intersections to allow the drivers of stopped vehicles a sufficient view of the intersecting roadway to decide when to enter the roadway or to cross it.

Specified areas along intersection approach legs and across their included corners should be clear of obstructions that might block a driver's view of potentially conflicting vehicles. These specified areas are known as clear sight triangles. The dimensions of the legs of the sight triangles shall be designed for the design speed of the facility being entered.

Departure sight triangles for intersections with stop control on the minor road should be considered for three situations:

1. Left turns from the minor road.
2. Right turns from the minor road; and
3. Crossing the major road from a minor-road approach.

Table 4-1 depicts minimum lengths for approach grades of 3 percent or less. If unusual design or safety considerations warrant increased sight distance, the requirements shall be determined by the County Engineer.

Table 4-1: Design Intersection Sight Distance

Intersection Movement	Minimum Sight Distance Length in Feet by Posted Speed (mph)						
	20	25	30	35	40	45	50
Left Turn	225	280	335	390	445	500	555
Crossing or Right Turn	195	240	290	335	385	430	480

Source: Policy on Geometric Design of Highways and Streets (Latest Edition), AASHTO

The illustration on the next page describes the concept of clear sight triangles to be maintained. Values are based on stopped condition, driver's eye height of 3.5 feet set back 14.5 feet from the edge of traveled way or stop line and an object height of 3.5 feet. Clear sight triangle distance

shall be calculated for situations that involve road approach grades in excess of 3 percent by using the adjustment factors listed in AASHTO.

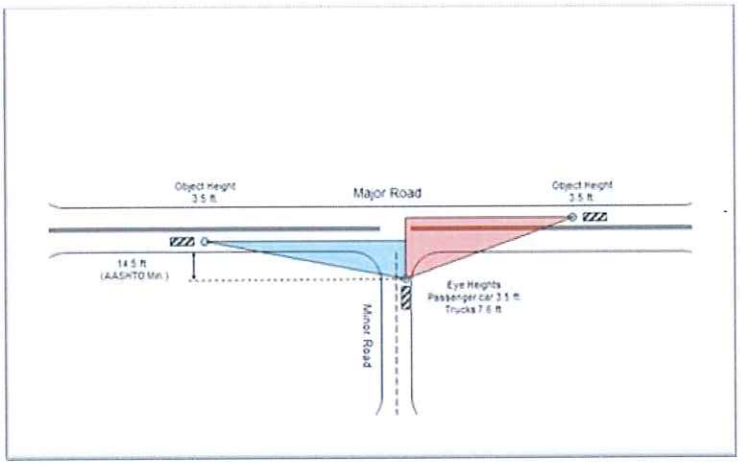

In situations where the clear sight triangle distance is questionable, the County Engineer may require the Project Engineer to prepare a clear sight triangle diagram, together with appropriate field measurements, and submit them for review prior to the approval of the construction plans. The diagram and measurements shall be stamped and signed by a qualified Professional Engineer. Where the clear sight triangle falls on private property, a sight easement shall be provided to maintain line of sight.

4.2.5 Geometrics

At the intersection of different classifications of roads such as between a minor arterial and a collector arterial, the centerline slope and typical cross section of the higher classified road should be carried through the intersection. The centerline slope and typical cross section of the lower classified road should match in a manner that will not interfere with the smooth movement of traffic in the travel lanes of the higher classified road.

Where two roads of the same classification intersect, the centerline grade shall be matched at the center of the intersection with cross slopes varying through the intersection to allow stormwater management.

All classes of local roads shall be treated as the same classification for purposes of this paragraph. Profile grades for all roads (public or private) intersecting with a County Road (existing or proposed) shall be designed and constructed so that adequate sight distance is provided.

4.2.6 Medians

Medians at roadway intersections are optional design features.

1. Medians should be as wide as feasible but of a dimension in balance with other components of the cross section. Median width shall be additional to, not part of the specified width of traveled way.

2. Medians shall be designed so as not to limit turning radii or sight distance at intersections. No portion of a side road median may extend into the right of way of the intersecting road. For medians 30 feet or wider, each intersecting road location must be considered a separate intersection.

3. Median edges shall be like outer road edges, either formed vertical curb and gutter or shoulder and ditch, provided that clear zone requirements are met.

4. Non-yielding or non-breakaway structures shall not be installed in medians. Street trees may be planted in medians subject to approval by the County Engineer.

A median may be grassed, landscaped, surfaced with pavement, or used for LID facilities.

The County Engineer may require revisions to medians as necessary to provide for new access points and to maintain required sight distance.

4.3 Road Approaches

Road approach shall mean a connection providing vehicle access to or from the County Road system.

A. Any person, firm, partnership, association, joint venture, corporation, or other entity desiring to construct or alter a permanent or temporary approach shall obtain a Road Approach Permit from Mason County Public Works. A copy of the permit shall be available for inspection at the site during construction. Any change in land use or any improvement to an existing site that increases traffic volumes using an existing approach shall require a new Road Approach Permit.

B. Road approaches shall meet the design requirements set forth in these Standards. Road approach design includes location, spacing, sight distance, throat length and width, radii, angles, stormwater management, and vertical/horizontal grades. The design of a road approach shall address the type of vehicles anticipated, traffic volume, and land use activities being accessed.

C. Road approach locations shall be carefully determined to minimize interference with normal roadway operation. Road approaches need to be constructed where sight distance is adequate for safe traffic operations.

Road approaches are classified as residential or major.

4.3.1 Residential Road Approach

A residential road approach is used to serve up to four single-family residences or two duplex units.

Residential road approaches shall be constructed in accordance with the specific geometric requirements found in Figures 4-2: Rural Residential/Major Approach, and 4-3: Urban Residential Approach. Grading and restoration of the approach shall be done to provide a smooth, passable, and safe transition to the road connection.

Spacing of residential road approaches shall comply with Section 4.1. They will be constructed the maximum practical distance from an arterial or local road sub-collector intersection, preferably not less than 80 feet from an arterial intersection nor less than 20 feet from a local road minor intersection. The distance is measured along the property line from the intersecting road right of way line to the nearest edge of the approach width.

4.3.2 Major Road Approach

A major road approach is used to serve multi-family and commercial uses.

The number, location, and size of major road approaches shall be determined by the volume and type of traffic generated by a proposed development, other road approaches in the vicinity, the amount of property frontage along the road, and existing channelization/ traffic controls. When multiple major roads approaching one parcel or development are permitted, they shall be spaced as described in Section 4.1.1.

Major road approaches shall meet the spacing requirements described in Section 4.1.1, except where physical site conditions and spacing of existing road approaches may cause the County Engineer to require another location. Distance is measured along the property line from the intersecting road right of way line to the edge of the road approach width.

Access to a corner lot with a frontage length less than the minimum required for an approach shall be established on a case-by-case basis by the County Engineer and the road approach shall be placed at a location to maximize safety.

Major road approaches shall be constructed in accordance with specific geometric requirements provided in Figure 4-4: Standard Detail – Urban Major Approach, and Figure 4-5: Standard Detail

– Urban Major Approach – Planter Strip. Grading and restoration beyond the end of the road approach shall be done to provide a smooth, passable, and safe transition.

Access to the abutting property shall be controlled along the access centerline from the county right of way or easement into the property for 50 feet minimum.

New road approaches that would create a four-legged intersection are desirable.

4.3.3 Construction Criteria

Approaches that are required by the County to be paved shall be paved to the right of way line or 3 feet beyond the end of the radius, whichever is greater, with a minimum of 3-inch compacted depth of Hot Mix Asphalt (HMA) over minimum 2-inch compacted depth crushed surfacing top course, or minimum 6-inches of reinforced Portland Cement concrete. All other approaches shall be constructed of 4-inch compacted depth crushed surfacing top course.

All approaches to County roads shall not exceed plus or minus 2% for 10 feet.

Wherever possible, the outer edge of an approach shall not be constructed closer than 70 feet to a bridge, culvert, or other structure that may warrant end protection using barriers or guardrail.

4.3.4 Temporary Road Approach

A temporary road approach shall be constructed in accordance with the residential road approach requirements except paving.

Grading and restoration beyond the end of the road approach shall be done to provide a smooth, passable, and safe transition to the existing facility. Temporary road approaches should preserve native vegetation to the extent feasible and avoid existing trees.

No site work may commence until a permit for the temporary road approach has been issued and the temporary approach constructed. All temporary road approaches shall be removed, and the right of way restored within 180 days from the date of approval. One extension of this permit time may be granted for a period not to exceed an additional 180 days.

4.3.5 Failure to Construct Properly

In addition to all other enforcement remedies, any person, firm, partnership, association, joint venture, corporation or other entity who fails to construct an approach properly shall be required to compensate the County for the improvement or removal of the approach. Compensation shall include administration time as well as equipment and materials to remove or improve the approach. Reimbursement shall be made to the Mason County Department of Public Works.

5 Traffic Control

5.1 Signs

All traffic signs and installations shall conform to the latest edition of the Manual on Uniform Traffic Control Devices (MUTCD), as adopted by the Secretary of the Washington State Department of Transportation per RCW 47.36.030. The Developer is responsible for the purchase and initial installation of all traffic control devices on County roads.

5.1.1 Regulatory, Warning, and Guide Signs

Signs give motorists the information they need to drive public roadways safely and legally.

The MUTCD contains information on the intended use and placement of signs. It also contains information on the size of standard regulatory and warning signs.

All traffic control signs shall be installed before a road is opened to vehicular use. The County Engineer shall approve all traffic control signs for type, size, legend, reflective facing material, and mounting device. This also applies to all major road approaches to County rights of way.

5.1.2 Private Road Name Signs

If a private road intersects with a maintained public road, a street name sign, built to County specifications, can be purchased from a sign manufacturer, and will be installed at the intersection by the applicant.

5.2 Delineation

Delineation includes the pavement markings, guideposts, and raised pavement markers used on and adjacent to the roadway to define vehicular travel paths.

The MUTCD provides delineation placement guidelines. Pavement markings are classified as either longitudinal or transverse. Roadway pavement markings or other traffic delineators shall be installed in accordance with approved plans, and the latest edition of the MUTCD.

Mason County has the following pavement marking requirements:

1. All pavement markings, except for long-line paint stripes and Raised Pavement Markers (RPMs), shall be in Thermoplastic.

2. Channelizing lines shall be 8 inches in width using Thermoplastic material (i.e. gore lines, islands).

3. Turn Lane-Use Arrows, Through Lane-Use Arrows, Turn and Through Lane-Use Arrows, and Lane-Reduction Arrows shall conform to Figure 3B-24 in the MUTCD.

4. Stop Lines shall be 18 inches in width and long enough to cross the lane or travel way.

5. Crosswalk markings shall be installed in accordance with the detail shown in Figure 5-2.

6. Raised Pavement Markers (RPM) when specified, shall be installed in accordance with the WSDOT Standard Plans Manual.

When construction requires traffic to use lanes not normally used, existing pavement markings may confuse motorists. Markings that create confusion should be completely removed and replaced with new markings before the path is open to traffic. The intended path should be clearly defined during the day, night, and twilight hours, as well as under wet and dry road conditions. Markings that will be visible at night shall be retroreflective.

6 Plan Preparation and Submittal

6.1 General Criteria

All road construction or reconstruction plans shall be prepared by and bear the stamp of a qualified Professional Civil Engineer, licensed in the State of Washington.

Construction plans for roads accessing state highways shall be submitted by the Project Engineer directly to WSDOT. All requirements and a signed agreement or approval for the intersection or road approach shall be obtained by the developer before final plan approval shall be granted by Mason County. A copy of the approved plan from WSDOT shall be submitted to Mason County before final plan approval. Where WSDOT requirements exceed these Standards, WSDOT standards shall govern.

The Project Engineer contacts the Mason County Department of Community Development for road name approval.

6.2 General Plan Formatting

6.2.1 Cover Sheet

Road construction plans submitted to the County for review and approval shall have a plan cover sheet containing the following information:

An overall site plan drawn to an appropriate scale showing the entire development and road system network, including its connection to an existing County Road or State highway. In the event the site is too large for the required information to be shown for the entire project site, the site plan view shall serve as an index to subsequent detailed plan sheets.

Easements, tracts, stormwater management facilities, all buffer and screening areas.

Standard notes that are applicable to the project.

6.2.2 Horizontal Plan

Horizontal plans of the project shall include the following information:

1. Road alignments with 100-foot stationing, preferably increasing to the north or east and reading from left to right; stationing at points of curve, tangent, and intersection; ties to section or quarter corners at each end or other established and monumented survey control points; and each section crossing.

2. Section, township, and range on each sheet; plat or projectname.

3. Bearings on road centerline.

4. Curve data, including radius, point of intersections, delta, arc length, and tangent length on all horizontal lines.

5. Right-of-way lines and widths for the proposed road and intersecting roads. The plans shall show dimensioned lot lines, tracts, easement areas, and lotnumbers.

6. All topographic features within right of way limits and sufficient area beyond to resolve questions of setback, slope, stormwater management, access onto abutting property, and road continuations. This shall include, but is not limited to, ditch flow lines, contours, utility locations, fences, existing curbing and approaches, pertinent trees and shrubbery, and other appurtenances that would affect the construction of theproject.

7. Identification of all existing County roads and adjoining subdivisions when it is pertinent to the scope of the project.

8. Typical roadway cross-section(s) of proposed road.

9. Scale: 1" = 50' is preferred, no scale smaller than 1" = 100' shall be accepted, unless it is the overall site plan sheet. Details for clarification may be shown at a convenient scale, normally 1" = 10' or 1" = 20'.

10. Utilities and structures within and adjacent to the right of way meeting the required clear zone distance.

11. Delineate and identify areas of easements (i.e., slopes or maintenance) outside the right of way that are caused by construction of the proposed project.

6.2.3 Profile Plan

Profile drawings of the project shall include the following information:

1. Road, stormwater, all existing or proposed utilities, and original ground profiles with stationing the same as the horizontal plan, preferably reading from left to right, to show stationing of points of curve, tangent, and intersection of vertical curves, with elevations.

2. Road grade and vertical curve data including K value; road to be measured atcenterline.

3. Vertical scale: 1" = 5' is preferred. Clarifying details may be shown at a convenient scale. Use 1" = 10' for vertical when horizontal plans are 1" = 100'.

4. When roads end at a property line, the existing ground profile shall be continued a minimum of 200 feet to show that the proposed vertical alignment is reasonable.

5. Description of vertical datum; controlling benchmarks; and project benchmarks with sufficient description and elevation frequency no less than every one-half mile.

6.2.4 Intersection Plan Details

Intersection plan details for the project shall include the following information:

1. When either of the road centerline profile grades within 35 feet of an intersection has a gradient of 8 percent or more, or less than 1.5 percent, an intersection detail drawn to a scale of 1" = 20' shall be included as a detail on the road construction plans. The detail shall show spot elevations every 25 feet on the road centerline, around the curb return, and grate elevations for stormwater management structures in the intersection.

2. The intersection plan shall be clearly detailed to show flow line grades and how surface stormwater management shall be controlled at the intersection. Curb return data for lesser gradients shall be shown on the road construction plans.

6.2.5 Channelization and Signage Plan

All plans submitted for approval for any improvements to County roads shall include a channelization plan set. This plan set shall include all existing channelization for the entire length of the impacted roadway, and all proposed channelization after the improvements are completed.

The plans shall contain the following:

1. A sign schedule in tabular format that includes location, type, legend, sheeting, size, and mounting.

2. Channelization including pavement width, shoulder width, corner radii, traffic islands, median dividers, pavement tapers and transitions, lane lines, centerlines, lane widths, and turn lanes.

3. Adjacent approaches, sidewalk, and walkways

4. Delineation including crosswalks, arrows, raised pavement markers, guideposts.

5. Illumination and traffic signals.

6. All pavement markings to be obliterated, and signs to be removed.

7. Scale: 1" = 50' is preferred, no scale smaller than 1" = 100' shall be accepted.

8. These standard notes:

   (a) Contractor to provide all thermoplastic markings, paint striping, and signage.

   (b) Contractor to remove all existing pavement markings in conflict with proposed markings.

   (c) All pavement markings shall conform to the latest edition of the Manual on Uniform Traffic Control Devices, unless otherwise noted.

   (d) Contractor shall contact Public Works Traffic Division prior to installing pavement markings or other traffic delineators on County rights of way.

6.3 Time Limitation of Approval

The approval of road construction plans shall be valid for a time not to exceed 3 years from the date of approval.

6.4 Submittal Procedure

Plans for proposed road construction or reconstruction shall meet the submittal requirements used for Site Development Activity Permits (SDAP). Contact the Department of Community Development for specific submittal requirements.

6.5 Changes to Approved Plans

From time to time, field conditions encountered during construction require modification to the design contained in the approved construction plans.

Prior to making any adjustments or changes to the approved construction plans, the Project Engineer shall first receive approval from the County Engineer for such changes. Changes shall be submitted to the Department of Community Development using the SDAP procedures.

Proposed modifications that the County Engineer deems substantial shall require additional review fees and re-issuance of the required permit. Minor proposed modifications may be accepted by the County Engineer without requiring the re-issuance of the accepted permit or the payment of additional review fees.

7 Utility Installation and Work in County Right of Way

7.1 Permits

No person, firm, partnership, association, joint venture, corporation, or other entity shall: construct, adjust, repair or relocate any utility line, or construct any new or alter any existing roadway feature in Mason County rights of way without first obtaining a permit from the Mason County Department of Public Works. A permit is not required for routine maintenance activities or repairs to aboveground utilities.

The applicant is required to be a qualified licensed and insured contractor in the State of Washington. Plans, drawings, or other details that shall enable the County to determine the location, size, length, time period, and purpose of the permit being sought shall be furnished by the applicant. The applicant is responsible for obtaining all applicable permits required by other agencies. All permits that extend or alter existing and new waterline installations may require review by the County Engineer and if determined the Fire Marshal prior to issuance.

7.1.1 Emergency Repairs

A permit need not be obtained before performing emergency repairs upon existing underground utilities where the public health, safety, and welfare is threatened if immediate repairs are not made.

As soon as practicable after the need for emergency work is discovered or after the emergency repairs have been made, the person, firm, partnership, association, joint venture, corporation, or other entity intending to make or having made the emergency repairs shall notify the Department of Public Works regarding the location, extent, and nature of the repairs.

On the next working day immediately following the date of the emergency repair, the public or private entity having made such emergency repairs shall apply for a permit to the Department of Public Works and shall comply with the Road Standards insofar as possible as determined by the Department of Public Works.

7.2 Sureties, Liability Insurance, and Indemnification

7.2.1 Surety Bond

The term "Bond" is defined as a financial guarantee in the form of a surety bond or assignment of funds, from a corporation authorized to do the business of surety in the State of Washington. The bond is required to ensure compliance with all permit conditions and shall be kept in full force and effect for a minimum of two years following acceptance of the work as complete by Mason

County. The bond shall be in favor of the Department of Public Works and is required prior to permit approval. The amount of the bond shall be as determined by Mason County.

Prior to the final approval of construction, a maintenance bond or other acceptable surety must be posted and maintained by the applicant for a period of two years. The maintenance bond or surety shall guarantee the improvements constructed under the right of way use permit against design and material defects and failures in quality and shall guarantee that the facilities constructed under the permit will be regularly and adequately maintained throughout the maintenance period. At the end of this time, the County will inspect the improvements and, when the improvements are determined acceptable the County will take over the maintenance and operations of the improvements.

The amount of the maintenance bond or surety shall be ten percent (10%) of the estimated construction cost of the improvements requiring maintenance, or five thousand dollars ($5,000.00) whichever is greater. The construction cost of the facilities requiring maintenance shall be estimated by a professional engineer and is subject to approval of the County Engineer.

If a person, firm, partnership, association, joint venture, corporation, or other entity locates, installs, adjusts, repairs, or relocates underground utility lines on a regular basis, the Department may allow such entity to post a blanket bond in an amount no less than five thousand dollars. If an entity that has posted a blanket bond thereafter makes application for a permit, on a project of such magnitude that the County determines that the amount of the blanket bond is inadequate, the County may require a separate, additional bond.

7.2.2 Waiver of Bonding Requirements

The bonding requirements described above may be waived at the discretion of the County Engineer.

7.2.3 Commercial Liability Insurance

Prior to beginning any work, and through the term of the maintenance bond, the applicant shall maintain commercial general liability insurance in an amount of not less than one million dollars ($1,000,000) combined single limit bodily injury and property damage, with a two-million-dollar ($2,000,000) aggregate.

Prior to issuing the permit to work in the right of way, a permit applicant shall provide the County with a certificate of insurance, signed by the insurance agent.

The policy shall be endorsed, and the certificate shall name Mason County as an additional insured on the policy with respect to activities performed under this permit and through the term covered by the maintenance bond. The certificate shall reflect that the insurance provided shall

be primary insurance and any insurance or self-insurance carried by the County shall be excess and not contributory to that provided by the applicant.

If, for any reason, a material change occurs in the insurance coverage during the period required by this provision, such changes shall not become effective until forty-five (45) days after Mason County has received written notice of such changes.

7.2.4 Indemnification

The holder of any right of way permit shall have no recourse whatsoever against Mason County or its officials, boards, commissions, agents, or employees for any loss, costs, expenses, or damages arising out of any provision or requirement of the permit or the Road Standards, or because of Mason County enforcement activities.

Granting of a franchise or permit shall not imply or be construed to mean the county shall be responsible for the design, construction, or operation of the facility or for public safety during the facility's installation, operation, or maintenance.

7.3 General Installation Guidelines

All utility installations shall be designed in accordance with the standards, codes, and regulations applicable to the type of utility, including those described throughout this document.

Utility installations shall be located to minimize the need for later adjustment, to accommodate future roadway improvements, and to provide service access to such installations with minimum interference to roadway traffic. If, while reviewing applications for work in the right of way, the County determines that a proposed utility location interferes with a future project identified in the County's Six-year Transportation Improvement Program (TIP), Stormwater Capital Facilities Plan, or Sewer Utility Capital Facilities Plan, the utility shall be required to locate elsewhere. The County shall aid the applicant in determining a new location.

Installations placed parallel to the road alignment shall be located as near as practicable to the right of way line and on uniform line and grade. Utility line crossings of a road shall be as near a right angle to the road centerline as practicable. Where practicable, crossings should avoid deep cuts, footings of bridges and retaining walls, or locations where roadway stormwater would be affected.

Where existing facilities are in place, new facilities shall be compatible with the existing installations and shall conform to these Standards, where possible.

Gravity systems, whether sanitary sewer or stormwater drainage, shall have precedence over other systems in planning and installation except where a non-gravity system has already been installed under a previously approved permit.

Notwithstanding other provisions, underground systems shall be located at least 4 feet away from road centerline and where they shall not otherwise disturb existing survey monumentation, nor interfere with the location of planned survey monumentation.

7.4 Adjustment and Relocation of Existing Utilities

Existing utilities in a public right of way shall be removed within a time specified by the County, when road work funded by the County involves disturbing an existing utility. All such removal or relocation shall be at the sole expense of the owning utility, unless otherwise specified in an approved, current franchise agreement between the utility and the County.

Aerial facilities converted to underground, at the request of the County, shall comply with appropriate rates approved by the Washington Utilities and Transportation Commission (WUTC).

The County's Six-year Transportation Improvement Program, Stormwater Capital Facilities Plan and Sewer Utility Capital Facilities Plan are available to all utilities and serve as the County's initial notice to utilities of planned improvements that may require utility adjustments or relocations.

All utilities shall, within the limits of standard business practice, make available appropriate short- or long-range development plans to the County. In addition, utilities agree to participate in the planning and design of all County administered projects as defined in the Mason County Public Works Utilities Coordination Policy and Procedures document. All utilities are encouraged to attend the annual Utility Coordination meeting held the first quarter of each year.

Notwithstanding reinforcement or protection otherwise provided, a contractor shall be responsible for the security of each existing pipeline and other utilities within a road construction zone. Where there are unusual utility hazards or where heavy construction equipment shall be used, the contractor shall provide adequate temporary protection. In replacing the roadway, the design should give due consideration to the protection of previously existing utilities in the roadway section without sacrificing the geometrics of roadway design.

7.5 Underground Utility Installation

The WSDOT/APWA Standard Specifications as well as all other applicable federal and state regulations, including health and safety standards, shall apply unless otherwise stated below.

1. A five-year moratorium on pavement excavation and trenching shall be enforced following the completion of a new road or road overlay. This requirement restricts all road trenching except in the event of an emergency repair or if all trenching is outside of the paved area.

2. When trenching through existing pavement, the initial pavement cut may be accomplished by jack hammering or saw cutting, all final vertical match lines shall be sawcut and extended to at least a minimum of 2 feet outside the limits of the trench unless against an existing curb.

3. To assure adequate compaction, all trenches shall be at least 3 feet wide unless otherwise approved by the County inspector. Trench sides shall be kept as nearly vertical as possible. Shoring shall comply with the Washington State Department of Labor and Industries Safety Standards.

4. Controlled Density Fill (CDF) may be required by the County in lieu of native backfill material or gravel borrow. Controlled Density Fill shall meet the requirements of WSDOT Standard Specifications.

5. Pipe shall be installed, and the trench backfilled in a manner assuring no deformation of the pipe likely to cause leakage or degradation of the roadway structure. Compaction and restoration shall be accomplished as detailed below and immediately after the trench is backfilled, so as to cause the least disruption to traffic.

6. Temporary restoration of the road surface for overnight use shall be accomplished by using cold mix, controlled density fill, or non-skid steel plates. Controlled density fill used for temporary restoration may be dumped directly into the trench, bladed out, and rolled. The temporary surface installation and maintenance shall be the responsibility of the applicant. After rolling, the trench shall be filled flush with asphalt to provide a smooth riding surface. Asphalt materials used for temporary patching shall be removed prior to placement of hot patch.

7. Gravel shoulders disturbed by excavation shall be replaced full depth with approved backfill and topped with 2 inches of crushed surfacing top course in accordance with WSDOT Standard Specifications.

8. Final patches shall be completed within 15 days of utility installation. This time frame may be adjusted at the County's discretion if delays are due to inclement paving weather, or other adverse conditions that may exist.

9. For Utility Trench Restoration and Backfill standards, see Figure 7-1.

10. Plowing of communication and electrical lines on, within right of way, or adjacent to existing roads by means of a vibratory plow is not allowed on county roads.

11. Water settling of backfill in trenches under existing roadways is not permitted.

12. Above ground utilities placed within the right of way such as telephone and cable pedestals, vaults or any other utility equipment enclosure shall be clearly marked or maintained in such a

way that all vegetation is cleared within a 5-foot radius and to a height of 12 inches above ground level. Clear zone requirements, as defined in Chapter 3.8, shall be adhered to.

7.5.1 Cover and Separation

Underground utilities shall be constructed in compliance with applicable Federal, State and local codes and standards.

All utility installations shall be designed in accordance with the standards, codes, and regulations applicable to the type of utility, including separation requirements.

7.5.2 Casings

Casings shall be installed for roadway crossings when required by appropriate industry codes and when directed by the County Engineer.

Casing may be required for the following conditions:

1. As an expediency in the insertion, removal, replacement, or maintenance of a carrier line crossing in locations where it is necessary in order to avoid open trench construction.
2. As protection for carrier lines from external loads or shock either during or after construction of a road.

Within the road right of way, where practicable, casing pipes shall extend beyond the toe of fill slopes, back of roadway ditch, or outside of curb.

Other than for necessary vents and/or drains, casing pipes shall be sealed at both ends.

Casing pipes shall be designed to support the load of the road and superimposed loads thereon and, at a minimum, shall equal the structural requirements for road stormwater management facilities. Casings shall be composed of materials of sufficient durability to withstand any conditions to which they may normally be exposed.

7.5.2.1 Materials

Carrier pipes (pipes directly enclosing a transmitted fluid or gas) shall conform to the material and design requirements of the appropriate utility industry and governmental codes and specifications.

Carrier pipes shall be designed to support the load of the road plus superimposed loads thereon when the pipe is operated under all ranges of pressure from maximum internal to zero pressure.

7.5.2.2 Marking

Location markers and emergency information shall be used when required by applicable County, State and Federal standards.

7.5.2.3 Identification

A tracer wire is required for all buried, nonconductive utilities, including side services, unless the utility line is straight with structures on each end. This wire shall also be connected to existing tracer wire at the main in a manner that ensures continuity of the tracer system.

7.5.3 Existing Roadways

7.5.3.1 Utility Trenches Parallel to Road Alignment

All trench backfill within the roadway prism shall be mechanically compacted as follows:

1. Trench backfill within the pipe zone shall be compacted in accordance with WSDOT Standard Specifications, section 2-03.3(14)C, method B.

2. All densities shall be determined by testing methods outlined in WSDOT Standard Specifications.

3. All trench backfill from back of ditch to the right of way line shall be mechanically compacted to 85 percent of maximum density throughout the depth of thetrench.

4. In any trench in which the density falls below specified requirements, and further compaction cannot be achieved with existing material, the backfill shall be replaced with gravel borrow as specified in the WSDOT Standard Specifications, or with CDF, as specified in Section 7.6 of this document. Any imported backfill material shall then be mechanically compacted to the appropriate maximum density.

After placing a tack coat on the existing asphalt edges, the final patch shall be constructed with HMA to match the existing pavement thickness, or 3 inches, whichever is greater. Pavement restoration shall be a minimum of ½ lane with no paving joint in wheel tracks. The classification of HMA and asphalt binder shall be determined by the County Engineer.

Any exceptions to the overlay requirement shall be on a case-by-case basis, subject to approval by the County Engineer and considering existing conditions of the roadway. Portland Cement Concrete pavement shall be restored consistent with WSDOT Standard Specifications.

7.5.3.2 Utility Trenches Perpendicular to Road Alignment

Utility trenching through existing pavement across the road alignment shall be discouraged. It shall not be permitted unless it can be shown that alternatives such as boring or jacking are not feasible, or unless the utility can be installed just prior to reconstruction or overlay of the road.

The entire trench shall be backfilled with gravel borrow, crushed surfacing top course, or CDF meeting the requirements of WSDOT Standard Specifications and shall be mechanically compacted to 95 percent of maximum density (modified proctor) in accordance with WSDOT Standard Specifications.

Where the same utility has previously installed utility crossings within 200 feet of a proposed crossing, a full width overlay consisting of 3 inches of HMA shall be required. The classification of HMA and asphalt binder shall be determined by the County Engineer. In these cases, the overlay shall extend 10 feet longitudinally beyond each patch end. A pre-level may be required prior to the overlay.

Where existing pavement defects are near the new cut, the County inspector may require additional pavement removal and replacement to incorporate/eliminate the existing pavement defect and provide for a firm tie to existing pavement.

7.5.3.3 Trenchless Construction (Jacking, Auguring or Tunneling)

Tunneling under pavements may be required in some situations. The developer/contractor shall install the pipe by jacking, auguring, or tunneling, or by installing the pipe within a casing by a combination of these methods.

Where crossing of existing utilities is a concern, windowing to expose existing utilities shall be allowed as conditioned within individual permits.

When use of a casing pipe is required, the developer/contractor shall be responsible to select the gauge and size required, unless otherwise indicated on the drawings, and consistent with this jacking or auguring operation, and shall be set to line and grade. During jacking or auguring operations, particular care shall be exercised to prevent caving ahead of the pipe which may cause voids outside the pipe.

When the carrier pipe is installed within a casing pipe, the carrier pipe shall be skidded into position in an acceptable manner and to the line and grade as designated. The void space between the casing and the pipe shall be filled with CDF or as otherwise approved by the County. The casing pipe shall be sealed or capped at each end.

Prior to jacking or auguring activities, shop drawings describing these activities, including dimensioning of pit length, size of underground borings and complete description of shoring, shall be submitted for approval.

Water boring shall not be permitted.

7.5.4 Testing

Consistent with Section 7.5.3, and prior to placing any surface materials on the roadway, it shall be the responsibility of the developer to provide density tests and soil reports certified by an independent testing agency.

A minimum of one test per lift shall be taken within every 500 feet of trench length and at depths of 50 percent of trench depth and at the surface. Compaction of laterals or service line trenches shall be tested where required by the County Engineer.

Depending on the quantity of Hot Mix Asphalt used in a project, and at the discretion of the County Engineer, the applicant may be required to submit a mix design, mix design verification test results, and independent assurance samples from an independent laboratory, in accordance with the WSDOT Standard Specifications. All costs for supplying required tests shall be the applicant's responsibility.

7.5.5 Individual Service Lines

Individual service lines shall be placed with a minimum of 36 inches cover from finished grade. Side connection shall enter perpendicular to the right-of-way within the frontage of the lot served.

Private septic tank effluent lines located within the right of way require that prior to approval, private easements shall be submitted to the Department of Public Works and recorded with the County Auditor. Following construction, record drawings of the installation shall be submitted to the Department of Public Works and recorded with the County Auditor. Effluent lines shall be placed with a minimum of 4 feet of cover from the lowest roadside feature (i.e., bottom of ditch), within 10 degrees of deflection from a perpendicular line to road centerline and extend to outside the right of way line. Effluent lines shall be encased in cast or ductile iron pipe of larger diameter or encased as approved by the County Engineer, for that portion of pipe within the right of way. Manholes should be designed and located in a manner that preserves the roadway's structure, safe operation, maintenance, and appearance and that shall cause the least interference to other utilities or future roadway expansion. Installations of manholes in the pavement or shoulders should be avoided.

7.6 Above Ground Utilities

Above ground utility objects, including poles, guys, transformer, and other related ground mounted equipment or facilities located within the County right of way shall be located to preserve a safe traffic environment, the appearance of the roadway, and the efficient and economic maintenance of the right of way.

Where breakaway or non-stationary ground mounted utilities are to occupy the space between the traveled way and right of way boundary, they shall be placed as far as possible from the traveled way. Installation of bollards within right of way is not allowed.

Utility poles, guy wires, and other stationary, above-ground utility objects shall be placed outside of clear zone areas. Exceptions shall be provided to the County Engineer for review. Installation of utility poles and other above ground utility objects shall not be permitted in sidewalks or walkways, unless clear zone and ADA requirements are met, and no feasible alternatives exist.

Locations of poles shall be compatible with approaches, intersections, and other roadway features (i.e., they shall not interfere with sight distance, roadway signing, traffic signals, culverts, etc.). Where possible, utilities shall share facilities so that a minimum number of poles are needed.

The cost of relocating poles or obstacles to achieve these location requirements are the responsibility of the developer whose project necessitates compliance with these Road Standards. These Standards are not intended to prevent the developer from making financial arrangements to accomplish removal of a pole or appurtenance with an appropriate utility or other owner of the obstacle.

7.6.1 Power and Communication Lines

Single pole construction and joint use of a pole is desirable and shall be used whenever feasible.

The minimum vertical clearance for overhead power and communication lines above the road and the minimum lateral and vertical clearance from bridges shall follow the current edition of National Electrical Safety Code and Washington State Department of Labor and Industries Electrical Construction Code.

Where irregularly shaped portions of the right of way extend beyond the normal right of way limits, a uniform alignment of facilities shall be allowed within the right of way.

7.7 Installations on Roadway Bridges and Structures

Attachment of utility lines to a roadway structure, including bridges, may be allowed where such attachment conforms to sound engineering considerations for preserving the roadway structure and its safe operation, maintenance, and appearance. The attachment shall be in accordance with the following:

1. Attachment of a utility shall not be considered unless the structure in question is of a design that is adequate to support the additional load and can accommodate the utility facility without compromise of roadway features, including reasonable ease ofmaintenance.

2. Manholes and other utility access panels shall be avoided within the roadway portion of a structure.

3. Attachment on a structure of a pipeline carrying a hazardous substance shall be avoided where practicable.

4. The utility attachment shall not reduce the clearance of a structure where such clearance is critical. Attachment to the outside of a structure shall be avoided where there are reasonable alternatives.

5. Utility mountings shall be of a type that do not create noise resulting from vibration.

6. The utility line at the back of the abutment shall curve or angle out to align outside the roadbed area in as short a distance as is operationally practicable.

7. An evaluation by a Structural Engineer, licensed in the State of Washington, may be required.

7.8 Miscellaneous Provisions

7.8.1 Preservation, Restoration, and Cleanup

The size of disturbed area used to install a utility shall be kept to a minimum.

Restoration methods shall be in accordance with these Standards and/or special provisions of the franchise, permit, agreement, or regulation.

Unsatisfactory restoration work shall be corrected by the utility within 10 business days of the date of written notification. At the direction of the County Engineer and without further notification, unsatisfactory restoration work may be corrected by the Public Works Department. The permit holder shall be billed for all costs incurred by the County for the execution of the restoration construction.

7.8.2 Traffic Control and Public Safety

Traffic controls, including detours for all utility work, shall conform to Chapter 8 of these Standards and the current MUTCD. A traffic control plan shall be required for Right of way Construction Permits that affect vehicle and/or pedestrian traffic.

7.9 Final Utility Adjustment to Finish Grade

All utility covers which are located on proposed asphalt concrete pavement roadways shall be set to final elevation after paving.

7.10 Final Cleanup and Restoration

In addition to restoration of the roadway, as described above, the responsible utility company or other permit holder shall care for adjacent areas as follows:

1. Roadways shall be cleaned and swept both during and after each working day.
2. Disturbed soils shall be final graded, seeded, and mulched after installation of the utility. In limited areas, seeding and mulching by hand, or sod placement using approved methods, may be acceptable.
3. Ditches that are lined with erodible soil and subject to rapid flows shall require seeding, jute matting, netting, placement of sod, or rock lined to control erosion.
4. Any silting of downstream stormwater management facilities, whether ditches or pipe and catch basins, which results from utility installation, shall be cleaned and the work area restored to a stable condition as part of the site cleanup each day.
5. The repair and restoration of the right of way, including cleanup, shall be completed within the dates specified in the permit. Extensions to the completion date shall be approved by the County Engineer.
6. All temporary erosion control measures shall be removed at project completion and site stabilized.

8 Construction Control and Inspection

8.1 Basis for Control of the Work

Work performed in the construction or improvement of County roads, whether by or for a private developer, by County forces, or by County contractor, shall be done in accordance with these Standards and approved plans and specifications. It is emphasized that no work may be started until such plans are approved. Any revision to such plans shall be approved by the County Engineer before being implemented.

The County Engineer shall have authority to enforce these Standards within existing right of way or right of way to be dedicated to the county in the future. The County Engineer shall delegate staff engineers, assistants, and inspectors as necessary to inspect the work, and they shall exercise such authority as the County Engineer may delegate.

Provisions of the WSDOT/APWA Standard Specifications shall apply, with the term "Engineer" therein construed to be the County Engineer.

8.2 Temporary Traffic Control

All traffic control and traffic control devices shall be as specified in the latest edition of the MUTCD. The Project Engineer shall submit temporary traffic control plans for review and approval.

During the progress of the work, barriers and warning signs shall be erected and maintained by the contractor as necessary or as directed by the County Engineer for the protection of the traveling public. The barriers shall be properly lighted when necessary.

8.2.1 Interim Traffic Control

The developer/contractor shall be responsible for interim traffic control during construction on or along traveled County roads. When road work is to be performed on County roads that are open to traffic, the developer/contractor is required to submit a traffic control plan for approval by the County Engineer prior to beginning the work. Traffic control shall follow the guidelines of the WSDOT/APWA Standard Specifications.

All barricades, signs and flagging shall conform to MUTCD requirements. Signs shall be legible and visible and shall be removed at the end of each workday if not applicable after construction hours.

All construction and maintenance operations shall be planned to keep interference with traffic to a minimum. Work shall be planned so that closure of intersecting roads, road approaches, or other access points is held to a minimum.

Adequate provision shall be made to safeguard any open excavation, and shall include barricades, lights, flaggers, or other protective devices as may be necessary or as requested by the County Engineer.

The storage of materials on through roadways and shoulders shall not be permitted. Parking of vehicles on through roadways shall be kept to a minimum.

8.2.2 Temporary Road Closures and Detours

When work restricting normal operation of a road cannot be avoided, the party doing the work shall accomplish the following:

1. Complete an application to Perform Work on County Road Rights of Way.
2. Identify any restriction(s) during the pre-construction meeting, or when no pre-construction meeting is required identify restriction(s) when the application is submitted.
3. Complete a traffic control plan.
4. Notify the County at least 48 hours before work begins.
5. Ensure all required signs are in place before work begins.
6. Notify the County when the restriction is removed.

When temporary road closures up to 12 hours long cannot be avoided, a traffic control and detour plan shall be submitted to the Department of Public Works with a permit application, a minimum of 10 days in advance of any planned closure. Approved notice signage shall be in place a minimum of seven (7) days prior to any closure.

In unique situations where closure of a county roadway is being considered for a continuous period exceeding 12 hours, the proponent should contact the Department of Public Works to review the feasibility of the closure. A continuous road closure exceeding 12 hours requires approval by the Board of County Commissioners. Providing that Public Works recommends approval of such a closure, the application package shall be submitted a minimum of six (6) weeks prior to implementation. In these cases, approved notice signage shall be in place a minimum of fourteen (14) days prior to any closure.

On major projects involving closures or significant inconvenience to road users, the developer may be required to notify by mail, or in person, residents and businesses directly affected. The

Department of Public Works Public Information Section may notify the appropriate public agencies and media outlets. Scheduled restrictions shall also be posted to the Mason County website.

8.2.3 Haul Routes

If the construction of a proposed development is determined by the County Engineer to require special routing of large trucks or heavy construction equipment to prevent impacts on surrounding roads, residences or businesses, the developer/contractor shall be required to develop and use an approved haul route plan.

When required, the haul route plan shall be prepared and submitted to the County Engineer and approved prior to beginning or continuing construction. The haul route plan shall address routing, hours of operation, signage and flagging, and daily maintenance.

If the developer/contractor's traffic fails to use the designated haul route, the County Engineer may prohibit, or limit further work on the development until such time as the requirements of the haul route plan are complied with.

The County Engineer may require the developer/contractor to document the haul route pavement condition prior to initiating work. Any necessary repairs to the road or right of way resulting from the construction activities shall be the responsibility of the developer/contractor.

8.2.4 Work Zone Clear Zone

Work zones are divided into traffic spaces where motorists are allowed to travel and workspaces where workers perform their work activities. Keeping the spaces separate in work zones ensures both workers and the motoring public are as safe as possible.

AASHTO *Roadside Design Guide* defines the work zone clear zone (WZCZ) as:

> *"...the unobstructed relatively flat area impacted by construction that extends outward from the edge of the traveled way."*

The purpose of a WZCZ is to ensure the contractor's equipment, employee's private vehicles, and storage or stockpiling of project materials occur in an appropriate clear area. WZCZ criteria normally applies to hazards other than equipment and materials absolutely necessary to construction during a work shift.

The WZCZ shall be established at these distances measured from the outside edge of the traveled way:

≤35 mph = 10 feet

40 mph = 15 feet

45-50 mph = 20 feet

During the actual hours of work, unless protected as described above, only materials necessary to construction shall be within the WZCZ, and only construction vehicles absolutely necessary to construction shall be allowed within the WZCZ or allowed to stop or park on the shoulder of the roadway.

The Contractor's nonessential vehicles and employee's private vehicles shall not be permitted to park within the WZCZ at any time unless protected as described above.

During nonworking hours, equipment or materials shall not be within the WZCZ unless it is protected by permanent guardrail or temporary concrete barrier. The use of temporary concrete barrier shall be permitted only if the County Engineer approves the installation and location.

Deviation from the above requirements shall not occur unless the Contractor has requested the deviation in writing and the County Engineer has provided written approval.

8.3 Right of Way Construction Inspection

All road and stormwater management facility construction proposed or in progress and which relates to right of way development, control, and inspection shall be performed under the direction of the County Engineer.

After written notification of project plan approval, and all required permits, financial guarantees, and necessary documentation have been acquired, a preconstruction conference may be scheduled. An effort shall be made to schedule conferences within five working days. A conference shall precede the beginning of construction and include the contractor, project engineer, utilities, and other parties affected.

The County shall be notified a minimum of two (2) working days prior to:

1. Initial site work involving clearing and the installation of temporary water retention/detention and siltation control.

2. Trenching and placing of storm sewers and underground utilities such as sanitary sewer, stormwater drainage, water, gas, power, telephone, signals, street lighting, fiber optic, and TV lines.

3. Any backfill and compaction of storm sewers and underground utilities.

4. Completion of underground utilities, roadway grading and placement of gravel base (if required). Compaction tests and certifications shall be provided at the time of inspection.

5. Verify proper curb and sidewalk forming and preparation prior to placing concrete.

6. Verify curb and sidewalk placement and finish of concrete.

7. The placement and compaction of crushed surfacing base course and top course.

8. Prior to final acceptance of construction work, acceptance for maintenance and release of construction performance bonds, the developer/contractor shall pay any required fees, submit any required maintenance and defect financial guarantees, and be required to submit one two sets of final corrected plans (as-built) reflecting all minor and design plan changes of the road and stormwater management system.

9. The County shall be notified a minimum of three (3) working days prior to any paving with asphalt concrete pavement or Portland cement concrete pavement.

10. Prior to release of the maintenance guarantee, there shall be successful performance during the maintenance period, correction of defects, and the payment of any outstanding fees.

11. For roads designed more than 10% grade, developer shall provide written certification from a professional land surveyor that, after placement of gravel base the road grade is below 12%.

8.4 Penalties for Failure to Notify for Inspection

If an applicant fails to notify the county as required by the Road Standards, Mason County may require sampling and/or testing post-construction, either by the Project Engineer or Mason County. Costs for such testing and/or sampling shall be borne by the applicant.

When such testing and/or sampling is required, the County may prohibit, or limit further work until all such tests and/or sampling have been completed and corrections made to the satisfaction of the County.

In addition to this provision, the County reserves its right to bring any or all other enforcement action for the failure to notify.

8.5 Embankment Construction Control in Developments

Provisions of the WSDOT/APWA Standard Specifications apply in all respects to development construction unless otherwise instructed by the County Engineer. The following elements are presented for clarification and emphasis:

Embankment and Cut Section Compaction - Compaction of the top 2 feet of fill subgrade and top 6 inches of cut subgrade shall meet a minimum 95 percent of maximum density in accordance with the WSDOT/APWA Standard Specifications. Subgrade fill below the top 2 feet shall be compacted to 90 percent of maximum density.

Testing for Density - Prior to placing any surfacing material on the roadway, it shall be the responsibility of the developer/contractor to provide density test reports reviewed and approved by the Project Engineer. Optimum moisture content and maximum density shall be determined by methods cited in WSDOT/APWA Standard Specifications or by other test procedures approved by the County Engineer. In fill sections, a minimum of one test shall be taken for every 1,000 cubic yards or fraction thereof and on each lift of embankment. In cut sections, the interval shall be every 100 feet ofroadway.

For work to be accepted, tests shall show consistent uniform density as required by tests referenced above.

In cases where tests do not meet the minimum standard, corrective action shall be taken, such as adding water, aerating, replacing material or applying more compactive effort as directed by the Project Engineer. Retests shall show passing densities prior to placing the next lift of subgrade fill.

For trenching in existing roads, see Figure 7-1

Finishing Subgrade - After the subgrade preparation has been completed, it shall be thoroughly checked by the developer/contractor using a level, string line, crown board, or other means to determine that the subgrade conforms to the typical section or special plan conditions prior to placing any surfacing material.

8.6 Asphalt Paving Control and Acceptance

When paving with HMA in traffic lanes, including lanes for ramps, truck climbing, weaving, and speed changes, and the specified compacted course thickness is greater than 0.10 foot, the acceptable level of compaction shall be a minimum of 92 percent of the maximum density as determined by AASHTO test method T 209.

The level of compaction attained shall be determined as the average of not less than 5 nuclear density gauge tests taken on the day the mix is placed and after completion of the finish rolling, at randomly

selected locations within each lot. The quantity represented by each lot shall be no greater than a single day's production or approximately 400 tons, whichever is less.

Asphalt concrete pavement not meeting the prescribed minimum density standard shall be removed and replaced with satisfactory material. Cores may be used as an alternate to the nuclear density gauge tests and shall be taken within 48 hours of the placement of the mix.

At the start of paving, if requested by the County, a compaction test section shall be constructed to determine the compatibility of the mix design, in accordance with section 5-04. Compatibility shall be based on the ability of the mix to attain the specified minimum density of 92 percent of the maximum density determined by AASHTO test method T 209. Following determination of compatibility, the Contractor is responsible for the control of the compaction effort. If the County does not request a test section, the mix shall be considered compactable.

HMA constructed under conditions other than listed above shall be compacted based on test point evaluation of the compaction train. The test point evaluation shall be performed in accordance with instructions from the County. The number of passes with an approved compaction train, required to attain the maximum test point density, shall be used on all subsequent paving.

In addition to the randomly selected locations for tests of the control lot, the County reserves the right to test any area which appears defective and to require the further compaction of areas that fall below acceptable density readings.

8.7 Survey Control

All survey control monuments, including existing monuments that are disturbed, lost, destroyed or removed during surveying or construction shall be replaced by a Professional Land Surveyor (PLS) licensed in the State of Washington, in accordance with WAC 332-120 and recognized good practice of land surveying.

All surveyed monuments, horizontal or vertical, tied, placed, replaced, or calculated shall be referenced to the coordinate system and meridian or vertical datum used. The controlling monuments used shall be specified.

Survey control monuments shall be constructed as shown on the approved construction plans, in conformance with the approved details for survey monuments. Survey monuments conforming with Figure 8-1, as approved by the County Engineer, shall be placed in County roads at:

1. Points of curvature
2. Points of tangent

3. Intersections
4. Centers of cul-de-sacs
5. As needed for intervisibility
6. As required by the County Engineer

If a PI falls within the paved roadway surface, a PI monument may replace the corresponding PC and PT monuments.

Monuments placed in landscape medians shall be marked with a sign, not more than 5 feet away, with "SURVEY MARKER Do Not Disturb." Road monuments may be offset to the paved shoulder and adequately described including offset.

For recorded subdivisions, survey monuments shall be placed at all exterior boundary corners and angle points. A signed and sealed statement from a registered surveyor that all monuments and corners indicated on the subdivision plat have been set and are in good condition shall be required prior to final plat approval.

A legal survey conforming to Chapter 58.09 RCW shall be filed with the County Auditor and/or the County Engineer showing methods used to establish the monument's position with references establishing the monument's location. Formal recorded documents shall contain the registered surveyor's certification. Monumentation shall be marked with the surveyor's certification number in accordance with Chapter 58.09 RCW.

8.8 Call Before You Dig

Builders in accordance with the Revised Code of Washington (RCW) are responsible for timely notification of utilities in advance of any construction in right of way or utility easements.

9 Permits and Standards for Use and Improvements to County Right of Way

9.1 Authority and Purpose

It is the purpose of this chapter to establish a permit process and standards for regulating the opening, improvements, and use of county rights of way by persons, firms or entities requiring use of and access to the County right of way for road and drainage purposes.

Improvements and use of County right of way that is opened within maintained or unmaintained areas is permitted by standards outlined in Chapter 7.

Permits issued pursuant to this chapter do not convey any vested right or ownership interest in any County right of way. County right of way improved pursuant to this chapter shall be open for use by the public except in those cases where specific conditions in a temporary use permit restrict the use of the right of way for safety reasons.

9.2 Permit Required

Any improvements, alterations, utility installation or expansion, logging, and drainage activities requires a Permit to Perform Work in County right of way issued by the Department of Public Works. No unopened County right of way or unmaintained road within a county right of way shall be privately improved, altered, expanded upon, or used for access or utilities purposes, nor shall development approval necessitating such improvements or use be granted, unless a permit has been issued pursuant to this chapter. Right of way use approvals issued prior to the effective date of the ordinance codified in this chapter shall remain in effect. However, subsequent additional uses or improvements to said right of way shall comply with the provisions of this chapter.

The County Engineer may issue a permit to the applicant upon filing of a complete application, payment of fees, posting of any required financial sureties, recording of covenants and dedication of additional right of way, if required. Issuance of a permit authorizes the construction of road and drainage improvements and use of the county right of way only for the purposes identified in the permit.

9.3 Permit Type and Requirements

The permit type and requirements shall be as defined within the appropriate category of Right of Way Use Permits that follow.

Category 1 Right of Way Use Permit

A Category 1 Right of Way Use Permit shall be required for use of and improvements to unopened county right of way or a privately maintained road when the applicant desires the County to assume maintenance responsibilities for the road and drainage improvements to be constructed or when such improvements are required in connection with other development approvals.

Required Improvements: A Category 1 Permit shall specify the minimum improvements required by the County Engineer. The road dimensions and design shall be in accordance with the Road Standards. The road shall be constructed from the point of connection with a county-maintained road to and across the applicant's property frontage. The storm drainage requirements shall be in accordance with the Mason County Storm Water Management Ordinance, Mason County Code, as it now exists or is hereafter amended. Construction of required improvements shall be completed by the applicant prior to issuance of a building permit. All Construction work and restoration work required by the permit shall be completed within one year of the permit's issuance.

In addition, conditions may be imposed to assure compliance of the permit with other county adopted plans, policies, standards, and regulations. The applicant shall be responsible for proper notice to the County requesting the necessary inspections and final approval. The applicant shall assume sole responsibility for the safe and adequate operation and maintenance of any improvements within or adjacent to the county right of way during the time the permit is in effect. If road name is nonexistent, a road name shall be applied for through the addressing division in the Mason County Department of Community Development for approval.

Survey: When considered necessary by the County Engineer to adequately define the limits of the right of way, the applicant shall be responsible for the survey of the right of way by a Washington State licensed Professional Land Surveyor at the applicant's cost.

Right of way Dedication: The applicant may be required to deed additional right of way across property under his/her ownership when necessary to fulfill the minimum road right of way width prescribed by the design standards.

Notification to Adjacent Property Owners Required: The department shall obtain verification via certified mail receipts that all owners of the property abutting on each side of that portion of the right of way that has been requested for use or improvement have been contacted. Objections made by abutting property owners shall be resolved by the applicant to the maximum extent practical to the satisfaction of the department prior to the issuance of the permit.

Maintenance Bond: Prior to the final approval of construction, a maintenance bond or other acceptable surety must be posted and maintained by the applicant for a period of two years (See Section 7.2.1).

Reimbursement by Other Property Owners: When an applicant makes road improvements in accordance with Chapter 10.3 of these Standards, Category 1 Right of Way Use Permit, and adjacent property

owners benefit from the improvements, the applicant may enter into a reimbursement agreement with the County to recoup a pro rata share of the costs of the improvements, in accordance with RCW Chapter 35.72 from adjacent property owners subsequently allowed to use the improvements.

Category 2 Right of Way Use Permit

A Category 2 Right of Way Use Permit shall be required for use of and improvements to an unopened county right of way when the maintenance responsibilities for the improvements will rest with the applicant and all abutting property owners using the improvements.

Required Improvements: A Category 2 Permit shall specify the minimum improvements required by the County Engineer. The road dimensions and design shall be in accordance with the Road Standards. At a minimum, the applicant will be required to construct half a road on the applicant's side of the right of way. The road will be constructed from the point of connection to a County maintained road or a road constructed under a previous permit, to and across the applicant's property frontage. Subsequent permits issued for the same right of way will require that improvements be made that further improve the road to accommodate the ultimate average daily traffic volume. Storm drainage requirements shall be in accordance with Mason County Storm Water Management Ordinance, Mason County Code, as it now exists or is hereafter amended. Construction of required improvements shall be completed by the applicant and accepted prior to issuance of a building permit. Construction work and all restoration work required by the permit shall be completed within one year of the permit's issuance.

Covenant: The applicant will be required to complete, sign, and record a covenant as a condition of approval for a Category 2 Permit; the covenant document will be prepared by County staff. This covenant will be legally binding and run with the land. The covenant does not replace or imply the existence of a formal road maintenance agreement. The covenant shall be filed and recorded with the Mason County Auditor prior to permit issuance. The covenant shall contain the following:

1. A statement that access to the applicant's property is across an unmaintained road, that the County is not responsible for maintenance of the road and the applicant acknowledges a joint responsibility with other property owners accessing the right of way for the maintenance and improvements made thereon. Maintenance responsibilities shall include, but are not limited to, maintenance of the road and shoulder surfacing, signs, storm drainage facilities and vegetation control.
2. A statement that the covenant is binding on the successors and assigns of the property owner.

Survey: When considered necessary by the County Engineer to adequately define the limits of the right of way, the applicant shall be responsible for the survey of the right of way by a Washington State licensed Professional Land Surveyor at the applicant's cost.

Right of way Dedication: The applicant may be required to deed additional right of way across property under his/her ownership when necessary to fulfill the minimum road right of way width prescribed by said

road standards for the road functional classification as identified in the permit.

Notification to Adjacent Property Owners Required: The department shall obtain verification via certified mail receipts that all abutting property owners on that portion of the right of way requested for use or improvement have been contacted by the proponent. Objections made by abutting property owners shall be resolved by the applicant to the maximum extent practical prior to the issuance of the permit.

Category 3 Right of Way Use Permit

A Category 3 Right of Way Use Permit shall be required for use of and improvements to an unopened County right of way or unmaintained road for the specific purpose of providing bike/pedestrian/equestrian access for trail purposes. The Category 3 Permit is limited to non-profits, organized community clubs, groups, and organizations. Upon the completion of trail improvements approved under a Category 5 Permit the maintenance responsibilities for the trail rest with the applicant(s).

Required Improvements: Improvements will consist of the construction of soft-surface trail improvements limited generally to the removal of brush and vegetation and generally avoiding tree removal. Removal of trees larger than four inches in diameter will require approval of the department during the permitting process and prior to actual trail construction. In addition, conditions may be imposed to assure compliance of the permit with other County adopted plans, policies, standards and regulations.

Construction of the required improvements shall be completed and approved by the County Engineer prior to final approval. The applicant shall be responsible for proper notice to the County Engineer requesting the necessary inspections and approval. The applicant shall assume sole responsibility for the safe and adequate operation and maintenance of any improvements within the County right of way.

Construction Impacts: Construction of trails shall always be approached from a low impact, multi-use point of view. Trails shall be placed to minimize impacts to vegetation and adjacent properties and improve safety.

Survey: Prior to construction of the trail, Mason County will provide survey centerline markings to ensure proper placement of the trail improvements near or on the edge of the right of way.

Notification to Adjacent Property Owners Required: The department shall obtain verification via certified mail receipts that all owners of the property abutting on each side of that portion of the right of way that has been requested for use or improvement have been contacted. Objections made by abutting property owners shall be resolved by the applicant to the maximum extent practical prior to the issuance of the permit.

Future Vehicular Access: A Category 5 Permit does not preclude future development of the right of way. Future development of the right of way must include consideration of non-motorized transportation and public access. If the County finds it necessary to utilize the right of way for any future purpose, the applicant shall not be reimbursed for the removal of any improvements or other costs incurred by the applicant.

Signs: Mason County shall supply, maintain, and pay for all required signs identified by the County Engineer. A sign shall be posted which states that "Trail Not Maintained by the County."

Preliminary Approval: Prior to making improvements the applicant shall receive a permit from Mason County authorizing said improvements.

Final Approval: The final approval shall be issued by the department upon inspection and completion of the construction of the required improvements. The County Engineer shall make the appropriate notice upon official County right of way records.

Application Permit Fees: For the purposes of this Category 3 Permit, Mason County shall have the discretion to waive fees associated with this application. Partnerships between communities and the County enhance cooperation in the realization of bike/pedestrian/equestrian systems at minimal expense to the community and the general public.

Category 4 Right of way Use Permit (Road Approach/Encroachment Permit)

A Category 4 Right of Way Use Permit shall be required when a property owner is requesting permanent or temporary private facilities (Driveways, logging, roads, parking, etc.) to an existing road in a County right of way. This permit applies to unmaintained roads constructed prior to the effective date of this manual or unmaintained roads constructed under a Category 2 Permit wherein the road abuts the applicant's property. The maintenance responsibilities for the road rest with the applicant and all abutting property owners having access to the road.

Temporary facilities shall include all uses not intended to last longer than one year in duration. The permit will specify minimum improvements required by the County. At a minimum, the permit will address road construction, safety, erosion control, drainage and right of way restoration requirements. In addition, conditions may be imposed to assure compliance with other adopted County plans, policies, standards, and regulations. Upon termination of the use of the right of way, the applicant shall be required to abandon and restore the right of way and designated under the permit conditions. A surety may be required to insure proper restoration.

Required Improvements: The Category 4 Permit is also referred to as a Road Approach/Encroachment Permit and shall incorporate the requirements of a permit issued pursuant to Chapter 4 of these road Standards and These permits shall be in compliance with these standards and Mason County Code 12.08 Highway Approaches. A building permit issued by the Mason County Building Department shall not pass a final inspection until the county engineer or their designee has verified that permitted access exists or an approach permit has been issued for the intended use.

Category 5 Right of Way Use Permit (Utility Permit)

A Category 5 Right of Way Use Permit shall be required for the construction, installation, repair, maintenance, removal, replacement, adjustment, and relocation of all above and below ground utility facilities that are located within the county right- of- way.

Required Improvements: The Category 5 Permit is also referred to as a Utility Permit and shall incorporate the requirements of a permit issued pursuant to Chapter 7 of these road Standards and Mason County Code 12.24 Utilities on road rights-of-way.

Franchise Agreement, Master Road Use Agreement or Private Line Occupancy Permit is required before A Utility Permit can be issued.

Category 6 Right of Way Use Permit (Moving Permit or Special Motorized Vehicle Permit)

A Category 6 Right of Way Use Permit shall be required for revisions to the movement of vehicles, materials, and structures with the opened right of way. These permits shall be in compliance with these standards and Mason County Code 10.44 Size, Weight, and Load and 12.36 Closed or Restricted Roads.

The Category 6 Permit is also referred to as a Moving Permit or a Special Motorized Vehicle Permit. Permitted uses of the right of way include log hauling, overweight/overwidth and overheight loads, commercial hauling, haul routes. Special Motorized Vehicle Permits are used for emergency situation during road restrictions.

Category 7 Right of Way Use Permit (Road Use Permit)

A Category 7 Right of Way Use Permit shall be required for private events which extend into the rights-of-way or affect the ordinary use of public streets, sidewalks, traffic etc. and/or generates considerable public participation. For practical purposes, this includes but not limited to parades, fun runs, cycling, temporary work or non-permanent items within the right-of-way. There is also a special use permit used during road weight restrictions.

The Category 7 Permit is also referred to as a Road Use Permit. For these permits, other than road weight restrictions, a traffic control plan, vicinity map and proof of commercial general liability and bodily injury/ property damage insurance for the duration of the event along with an endorsement naming the County as an additional insured on the policy are required with the permit not less than thirty (30) days prior to event. Depending on the scope, the County Engineer may require a Road Use Waiver, public/business notifications or other special provisions for safety and traffic control measures. All permit requirements are at no expense to the County.

Figure 3-1: Typical Urban Roadway Section - Cement Concrete Barrier Curb, Gutter, and Sidewalk

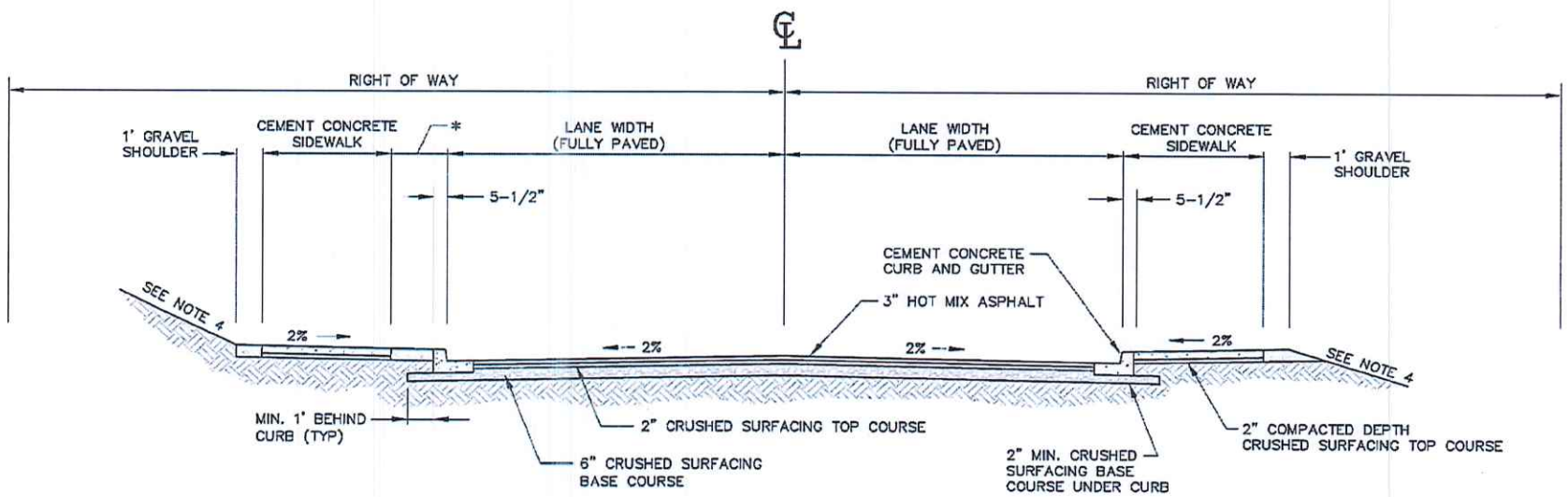

TYPICAL URBAN ROADWAY SECTION

NTS

NOTES:

1. SURFACING DEPTHS SHOWN ARE MINIMUMS FOR ARTERIAL ROADS AND SHALL BE DESIGNED WITH A STRUCTURAL SECTION THAT TAKES INTO ACCOUNT THE LOAD BEARING CAPACITY OF THE SOILS AND THE TRAFFIC CARRYING REQUIREMENTS OF THE ROADWAY. PLANS SHALL BE ACCOMPANIED BY THE SOILS AND TRAFFIC ANALYSIS ON WHICH THE DESIGN IS BASED.
2. WHEN NATIVE SUBGRADE MATERIAL MEETS THE SPECIFICATIONS FOR CRUSHED SURFACING BASE COURSE, THE 6" CRUSHED SURFACING BASE COURSE CAN BE ELIMINATED OR SUBSTITUTED WITH A LESSER THICKNESS OF CRUSHED SURFACING BASE COURSE OR EQUIVALENT MATERIAL.
3. CURBED SECTION SHALL BE USED IN ALL URBAN AREAS UNLESS A DEVIATION IS APPROVED.
4. SIDE SLOPES SHALL BE CONSTRUCTED NO STEEPER THAN 2H:1V FOR LOCAL ROADS AND 3H:1V FOR CUT SLOPES AND 4H:1V FOR FILL SLOPES ON ARTERIALS UNLESS A TRAFFIC BARRIER OR ADEQUATE JUSTIFICATION IS PROVIDED.
5. RIGHT OF WAY WIDTHS SHALL BE INCREASED AS NECESSARY TO ACCOMMODATE ADDITIONAL LANES.
6. SEE WSDOT/APWA STANDARD SPECIFICATION FOR VERTICAL CURB, GUTTER, AND SIDEWALK CRITERIA.
7. SIDEWALK WIDTH AND LOCATION SHALL MATCH EXISTING CONDITIONS AND/OR COMPLY WITH CURRENT AREA PLANNING DOCUMENTS AND CONDITIONS OF DEVELOPMENT APPROVAL.

* PLANTER STRIP AS REQUIRED.

MASON COUNTY DEPARTMENT OF PUBLIC WORKS	**TYPICAL URBAN ROADWAY SECTION**	
	CEMENT CONCRETE BARRIER CURB, GUTTER, AND SIDEWALK	FIG 3–1

Figure 3-2: Typical Rural Roadway Section - Gravel Shoulders and Open Drainage

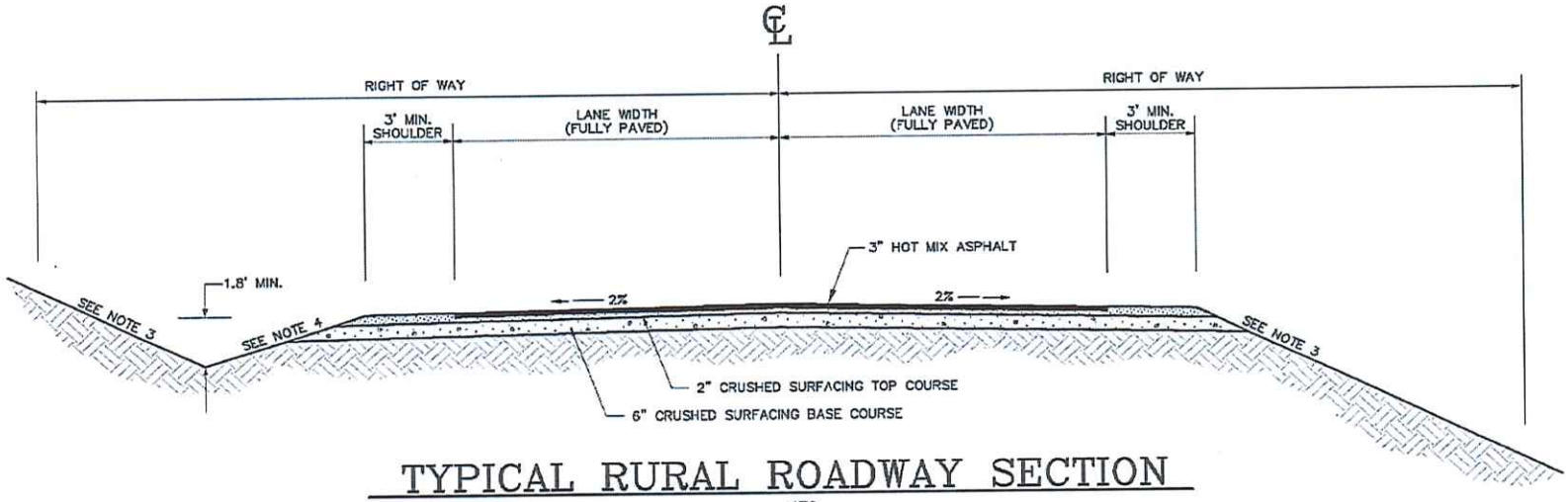

TYPICAL RURAL ROADWAY SECTION

NTS

NOTES:

1. SURFACING DEPTHS SHOWN ARE MINIMUMS FOR ARTERIAL ROADS AND SHALL BE DESIGNED WITH A STRUCTURAL SECTION THAT TAKES INTO ACCOUNT THE LOAD BEARING CAPACITY OF THE SOILS AND THE TRAFFIC CARRYING REQUIREMENTS OF THE ROADWAY. PLANS SHALL BE ACCOMPANIED BY THE SOILS AND TRAFFIC ANALYSIS ON WHICH THE DESIGN IS BASED.
2. WHEN NATIVE SUBGRADE MATERIAL MEETS THE SPECIFICATIONS FOR CRUSHED SURFACING BASE COURSE, THE 6" CRUSHED SURFACING BASE COURSE CAN BE ELIMINATED OR SUBSTITUTED WITH A LESSER THICKNESS OF CRUSHED SURFACING BASE COURSE OR EQUIVALENT MATERIAL.
3. SIDE SLOPES SHALL BE CONSTRUCTED NO STEEPER THAN 2H:1V FOR LOCAL ROADS AND 3H:1V FOR CUT SLOPES AND 4H:1V FOR FILL SLOPES ON ARTERIALS UNLESS A TRAFFIC BARRIER OR ADEQUATE JUSTIFICATION IS PROVIDED.
4. DITCH (IN-SLOPE) SHALL NOT EXCEED 4H:1V FOR ARTERIALS AND 2H:1V FOR LOCAL ROADS.
5. RIGHT OF WAY WIDTHS SHALL BE INCREASED AS NECESSARY TO ACCOMMODATE ADDITIONAL LANES.

MASON COUNTY DEPARTMENT OF PUBLIC WORKS	TYPICAL RURAL ROADWAY SECTION	
	GRAVEL SHOULDERS AND OPEN DRAINAGE	FIG 3–2

Figure 3-3: Typical Rural Roadway Section - Thickened Edge Curb

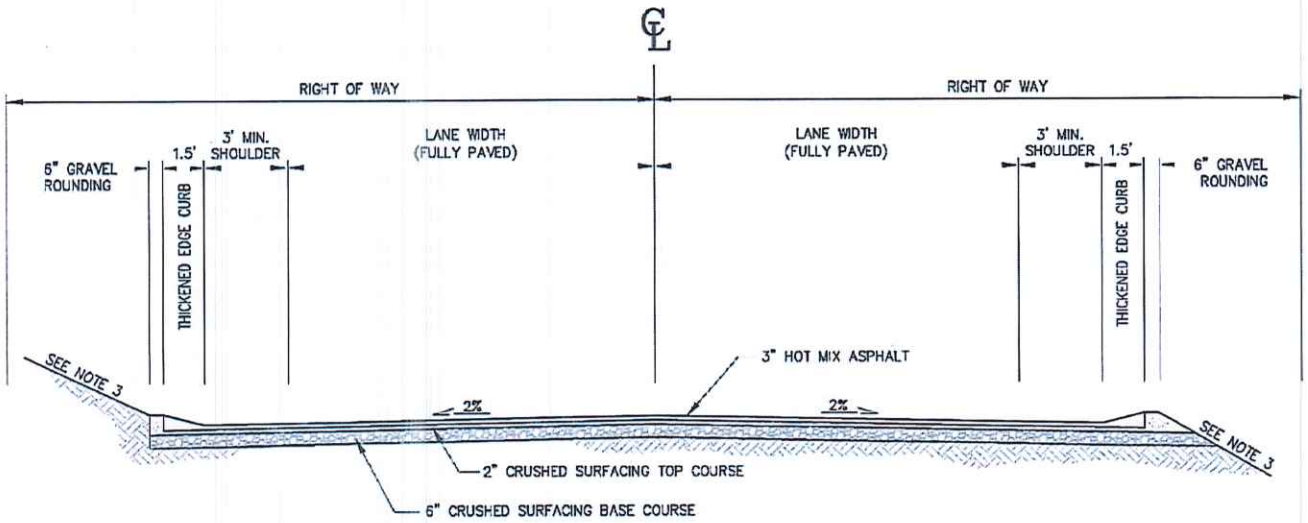

TYPICAL RURAL ROADWAY SECTION

SEE SECTION 3.7
NTS

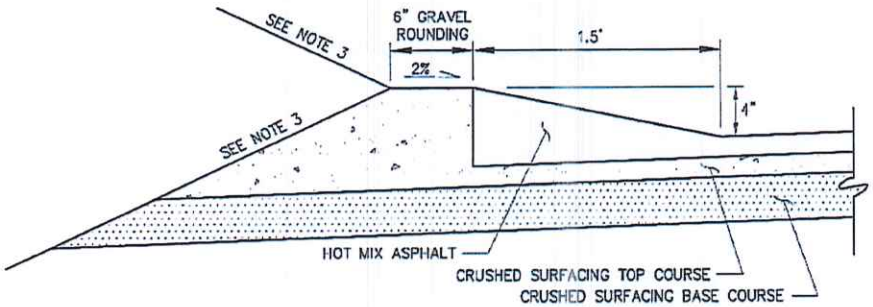

ASPHALT THICKENED EDGE DETAIL

NTS

NOTES:

1. SURFACING DEPTHS SHOWN ARE MINIMUMS FOR ARTERIAL ROADS AND SHALL BE DESIGNED WITH A STRUCTURAL SECTION THAT TAKES INTO ACCOUNT THE LOAD BEARING CAPACITY OF THE SOILS AND THE TRAFFIC CARRYING REQUIREMENTS OF THE ROADWAY. PLANS SHALL BE ACCOMPANIED BY THE SOILS AND TRAFFIC ANALYSIS ON WHICH THE DESIGN IS BASED.
2. WHEN NATIVE SUBGRADE MATERIAL MEETS THE SPECIFICATIONS FOR CRUSHED SURFACING BASE COURSE, THE 6" CRUSHED SURFACING BASE COURSE CAN BE ELIMINATED OR SUBSTITUTED WITH A LESSER THICKNESS OF CRUSHED SURFACING BASE COURSE OR EQUIVALENT MATERIAL.
3. SIDE SLOPES SHALL BE CONSTRUCTED NO STEEPER THAN 2H:1V FOR LOCAL ROADS AND 3H:1V FOR CUT SLOPES AND 4H:1V FOR FILL SLOPES ON ARTERIALS UNLESS A TRAFFIC BARRIER OR ADEQUATE JUSTIFICATION IS PROVIDED.
4. FUNCTIONAL CLASSIFICATION AND EXISTING ADT DEFINED BY KCDPW TRAFFIC TRANSPORTATION DIVISION.
5. RIGHT OF WAY WIDTHS SHALL BE INCREASED AS NECESSARY TO ACCOMMODATE ADDITIONAL LANES.

MASON COUNTY DEPARTMENT OF PUBLIC WORKS	**TYPICAL RURAL ROADWAY SECTION**	
	THICKENED EDGE CURB	FIG 3–3

Figure 4-1: Standard Detail - "L" Intersection Very Low Volume Local Roads

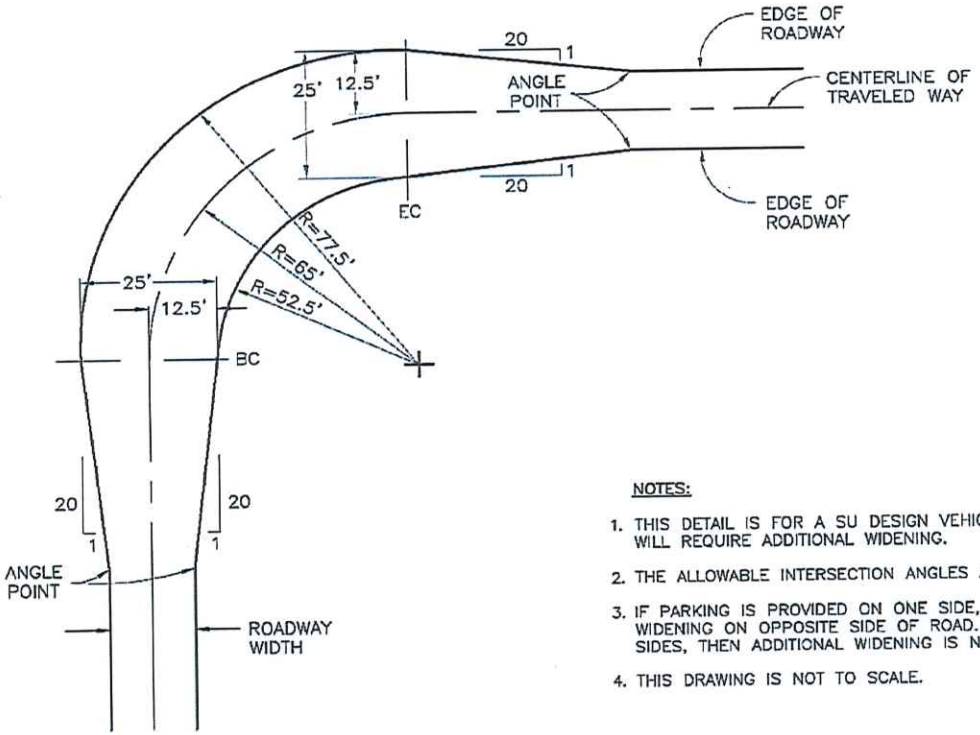

NOTES:

1. THIS DETAIL IS FOR A SU DESIGN VEHICLE ONLY. LARGER DESIGN VEHICLES WILL REQUIRE ADDITIONAL WIDENING.
2. THE ALLOWABLE INTERSECTION ANGLES ARE 75 TO 105 DEGREES.
3. IF PARKING IS PROVIDED ON ONE SIDE, THEN ONLY NEED TAPER AND WIDENING ON OPPOSITE SIDE OF ROAD. IF PARKING IS PROVIDED ON BOTH SIDES, THEN ADDITIONAL WIDENING IS NOT NECESSARY.
4. THIS DRAWING IS NOT TO SCALE.

MASON COUNTY DEPARTMENT OF PUBLIC WORKS	STANDARD DETAIL	
	"L" INTERSECTION – VERY LOW VOLUME LOCAL ROADS	FIG 4–1

Figure 4-2: Standard Detail - Rural Residential / Major Approach

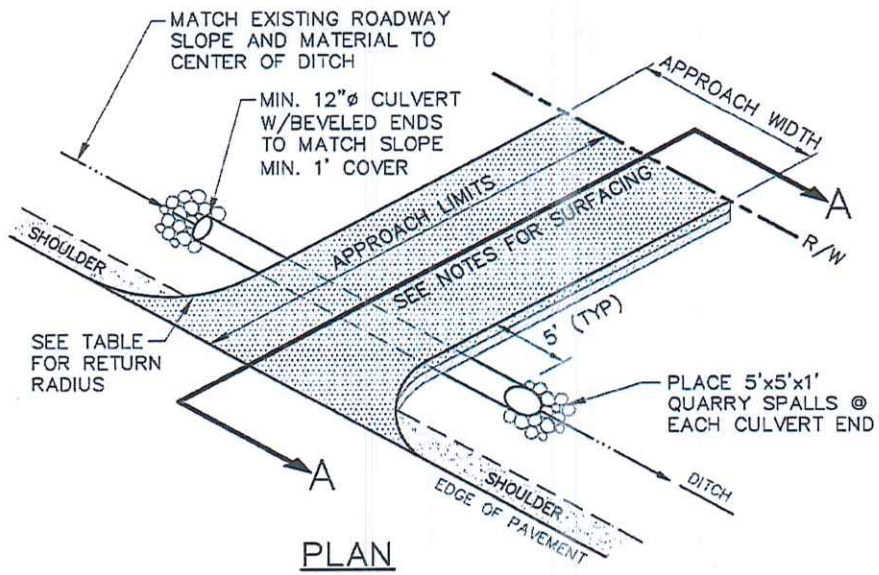

PLAN

NTS

RETURN RADIUS

RESIDENTIAL APPROACH	– LOCAL ROAD	10'
RESIDENTIAL APPROACH	– SUB–COLLECTOR	15'
RESIDENTIAL APPROACH	– COLLECTOR	20'
RESIDENTIAL APPROACH	– MINOR ARTERIAL	25'
RESIDENTIAL APPROACH	– PRINCIPAL ARTERIAL	30'
MAJOR APPROACH	– ALL CLASSIFICATIONS	35'

APPROACH WIDTH

RESIDENTIAL	10' MIN./20' MAX.
MAJOR	20' MIN./36' MAX.

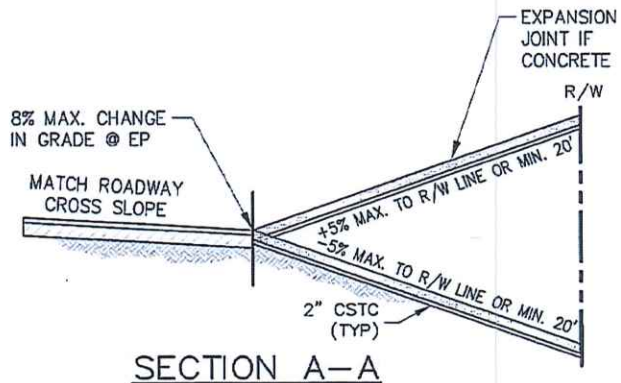

SECTION A–A

NTS

NOTES:

1. APPROACH PAVING = MINIMUM 2" COMPACTED DEPTH HOT MIX ASPHALT, OVER MINIMUM 2" COMPACTED DEPTH CRUSHED SURFACING TOP COURSE, OR MINIMUM 6" CEMENT CONCRETE CLASS 4000. (WHEN APPROACH GRADE EXCEEDS ± 5%.)
2. ALL PORTLAND CEMENT CONCRETE APPROACHES REQUIRE AN INSPECTION OF THE FORMS AND EXPANSION JOINT LOCATIONS PRIOR TO CONCRETE INSTALLATION.
3. APPROACH SHALL NORMALLY BE AT 90 DEGREES TO ROAD CENTERLINE, BUT CAN VARY FROM 75 TO 105 DEGREES.
4. CULVERT PIPE MUST BE CONCRETE, CMP, OR CPEP WITH QUARRY SPALLS. MINIMUM LENGTH IS 20' OR DETERMINED BY WIDTH OF APPROACH PLUS 5' EACH END (EXCLUDING BEVELED END SECTIONS).
5. IF EXISTING COUNTY ROAD SURFACE IS OTHER THAN ASPHALT CONCRETE PAVEMENT, A LIKE MATERIAL MAY BE USED ON ROAD APPROACH.

MASON COUNTY DEPARTMENT OF PUBLIC WORKS	**STANDARD DETAIL**	
	RURAL RESIDENTIAL / MAJOR APPROACH	FIG 4–2

Figure 4-3: Standard Detail - Urban Residential Approach

	"A"	"B"	"C"	"D"
RESIDENTIAL	10' MIN.	15' MIN.	5' MAX.	2.50'

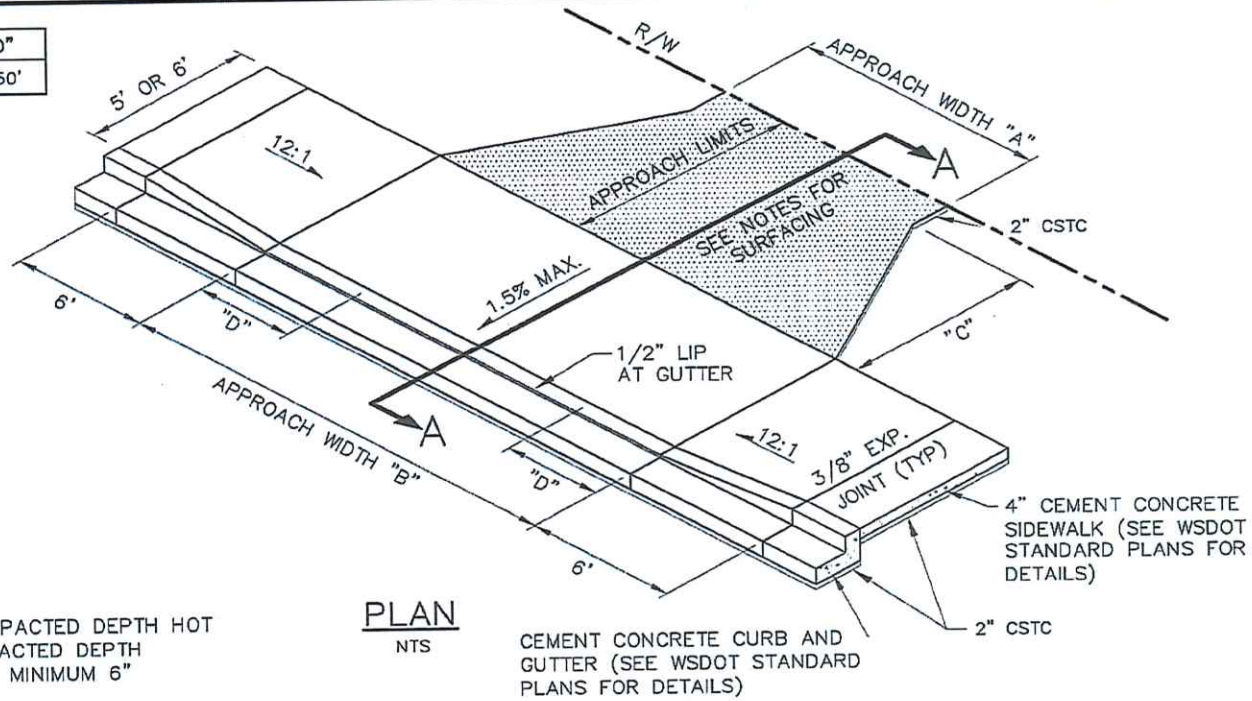

PLAN
NTS

NOTES:

1. APPROACH PAVING = MINIMUM 3" COMPACTED DEPTH HOT MIX ASPHALT, OVER MINIMUM 2" COMPACTED DEPTH CRUSHED SURFACING TOP COURSE, OR MINIMUM 6" CEMENT CONCRETE CLASS 4000.
2. ALL PORTLAND CEMENT CONCRETE APPROACHES REQUIRE AN INSPECTION OF THE FORMS AND EXPANSION JOINT LOCATIONS PRIOR TO CONCRETE INSTALLATION.
3. MAINTAIN 1/2" LIP AT GUTTER.
4. APPROACH SHALL NORMALLY BE AT 90 DEGREES TO ROAD CENTERLINE, BUT CAN VARY FROM 75 TO 105 DEGREES.
5. WHEN SIDEWALK IS ADJACENT TO A ROADWAY, THEN THE SLOPE IS ALLOWED TO MATCH THE PROFILE OF THE ROAD.
6. REFER TO CURRENT WSDOT STANDARDS FOR SPECIFIC WHEELCHAIR RAMP REQUIREMENTS.

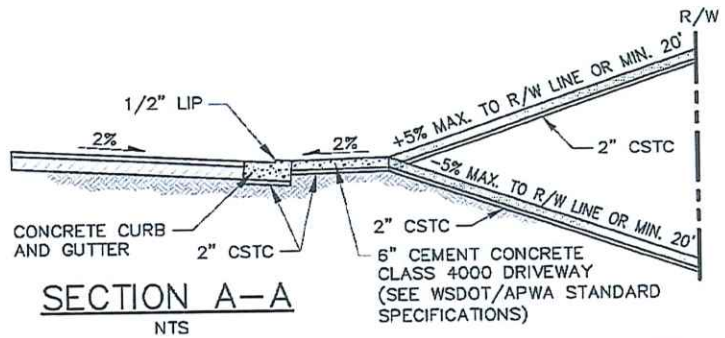

SECTION A–A
NTS

MASON COUNTY
DEPARTMENT OF PUBLIC WORKS

STANDARD DETAIL

URBAN RESIDENTIAL APPROACH

FIG 4–3

Figure 4-4: Standard Detail - Urban Major Approach

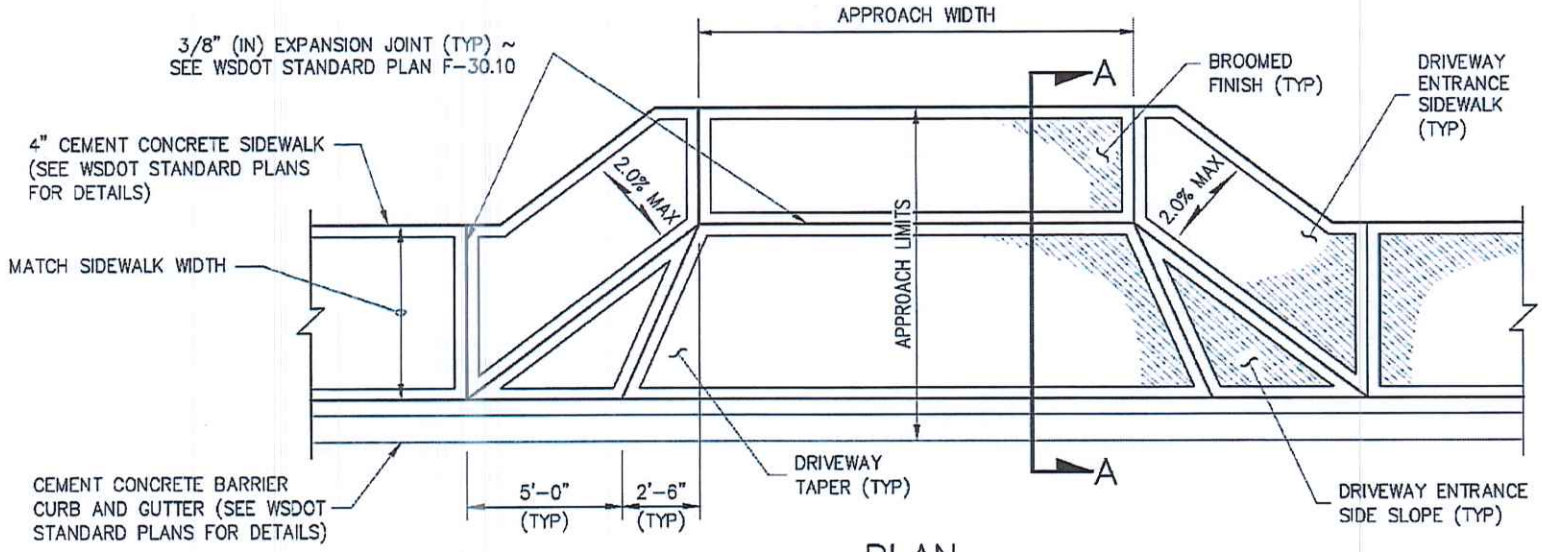

PLAN
NTS

NOTES:

1. APPROACH WIDTH = 20' MIN. AND 36' MAX.
2. APPROACH SHALL NORMALLY BE AT 90 DEGREES TO ROAD CENTERLINE, BUT CAN VARY FROM 75 TO 105 DEGREES.
3. REFER TO CURRENT WSDOT STANDARDS FOR SPECIFIC WHEELCHAIR RAMP REQUIREMENTS.

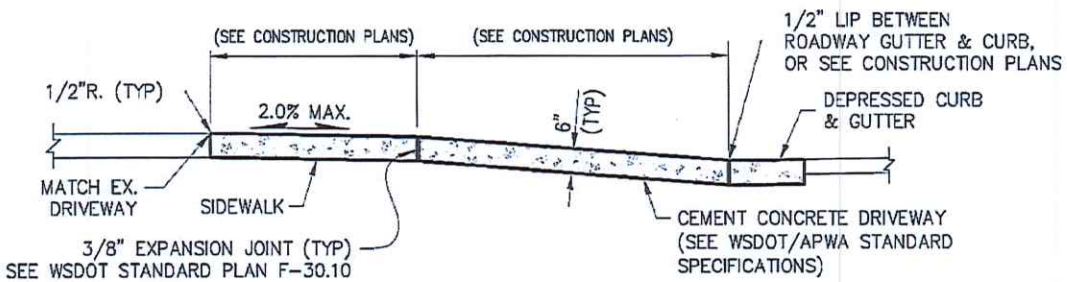

SECTION A–A
NTS

MASON COUNTY DEPARTMENT OF PUBLIC WORKS	STANDARD DETAIL	
	URBAN MAJOR APPROACH	FIG 4–4

Figure 4-5: Standard Detail - Urban Major Approach - Planter Strip

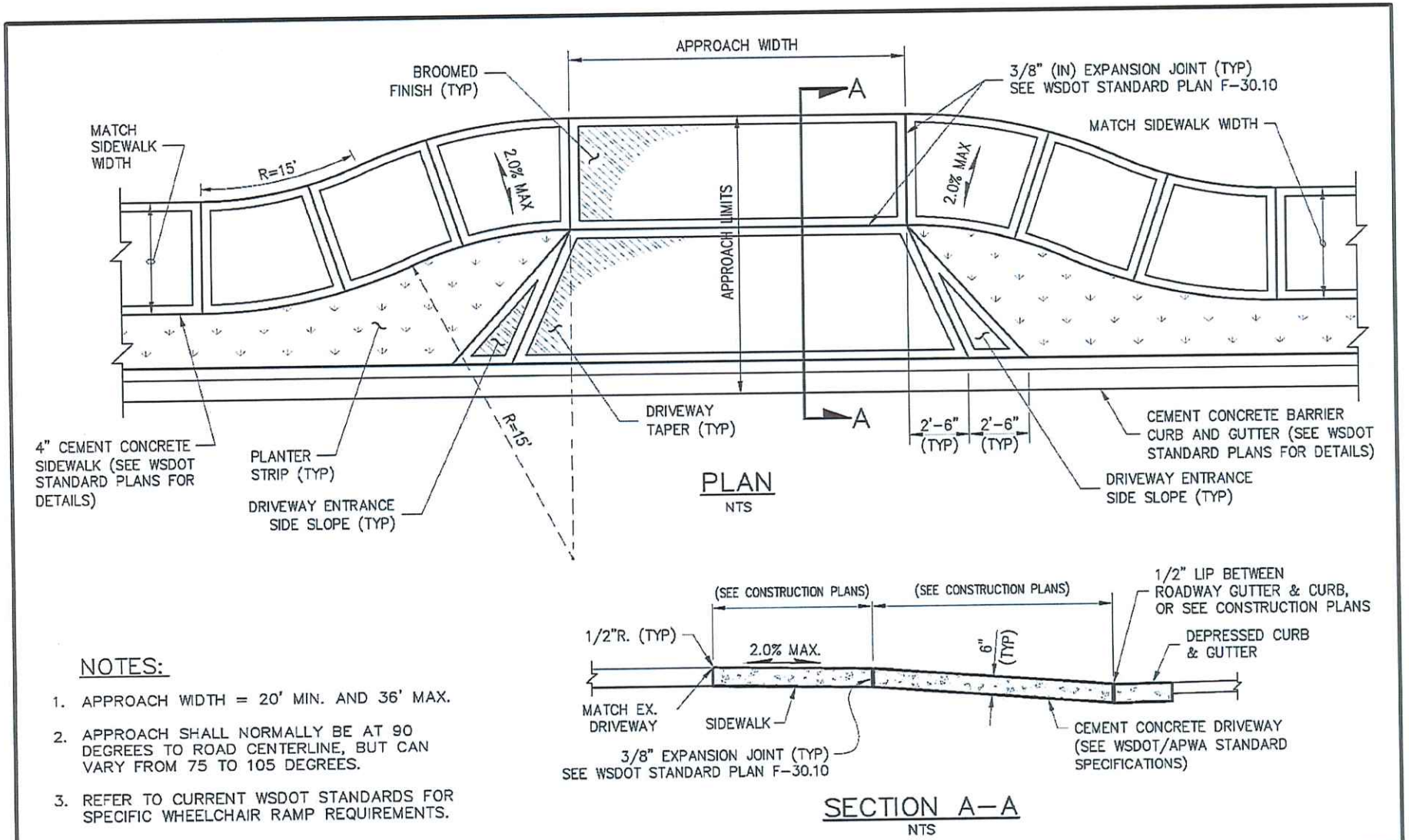

FIG 4-6 TYPICAL PRIVATE ROAD AND DRIVEWAY SECTION FOR 3 SINGLE FAMILY UNITS OR LESS

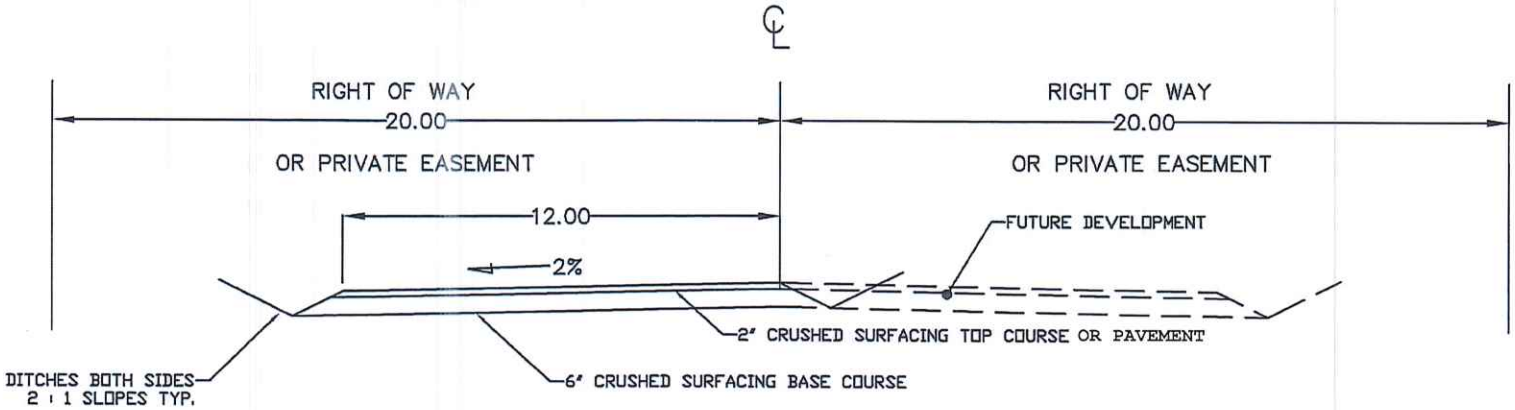

NTS

NOTES

1. CONSTRUCT AND MAINTAIN ROADWAY FACILITY, PLUS PROVISIONS FOR ALL UTILITIES TO SERVE MAXIMUM DENSITY PERMITTED BY ZONING OR COMPREHENSIVE PLAN BUT NOT LESS THAN AS SHOWN ON THE CROSS-SECTION.
2. CLEARING, GRADING AND GRUBBING: NECESSARY FOR CONSTRUCTION AND PROPER SIGHT DISTANCE.
3. ROADWAY IS TO BE CONSTRUCTED ON ONE SIDE OF RIGHT OF WAY CENTERLINE, LEAVING THE OTHER SIDE FOR FUTURE DEVELOPMENT.
4. PROVIDE VEHICLE PASSING TURNOUTS (10' WIDE X 35' LONG) AT 200' FT INTERVALS.
5. DITCHING: AS REQUIRED TO PROVIDE PROPER DRAINAGE.
6. BALLAST THICKNESS MAY BE INCREASED FOR UNSTABLE SUB-BASE AS DETERMINED BY THE COUNTY ENGINEER.
7. PRIVATE ROADS ARE NOT MAINTAINED BY THE COUNTY EVEN IF THEY ARE ON A COUNTY RIGHT OF WAY.

MASON COUNTY DEPARTMENT OF PUBLIC WORKS		
	PRIVATE ROADS	FIG 4-6

FIG 4-7 TYPICAL PRIVATE ROAD AND DRIVEWAY ROADWAY SECTION FOR 4 OR MORE SINGLE FAMILY UNITS

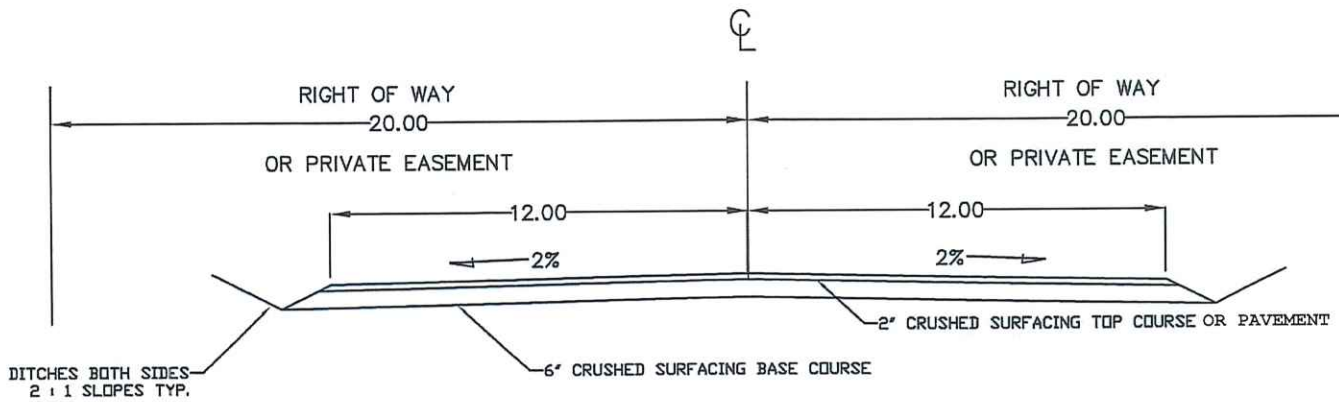

NTS

NOTES/ CONDITIONS

1. CONSTRUCT AND MAINTAIN ROADWAY FACILITY, PLUS PROVISIONS FOR ALL UTILITIES TO SERVE MAXIMUM DENSITY PERMITTED BY ZONING OR COMPREHENSIVE PLAN BUT NOT LESS THAN AS SHOWN ON THE CROSS-SECTION.
2. CLEARING, GRADING AND GRUBBING NECESSARY FOR CONSTRUCTION AND PROPER SIGHT DISTANCE.
3. DITCHING: AS REQUIRED TO PROVIDE PROPER DRAINAGE.
4. BALLAST THICKNESS MAY BE INCREASED FOR UNSTABLE SUB-BASE AS DETERMINED BY THE COUNTY ENGINEER.
5. PRIVATE ROADS ARE NOT MAINTAINED BY THE COUNTY EVEN IF THEY ARE ON A COUNTY RIGHT OF WAY.

MASON COUNTY DEPARTMENT OF PUBLIC WORKS		
	PRIVATE ROADS	FIG 4-7

Figure 4-8: Standard Detail - Example Departure Sight Distance Diagram

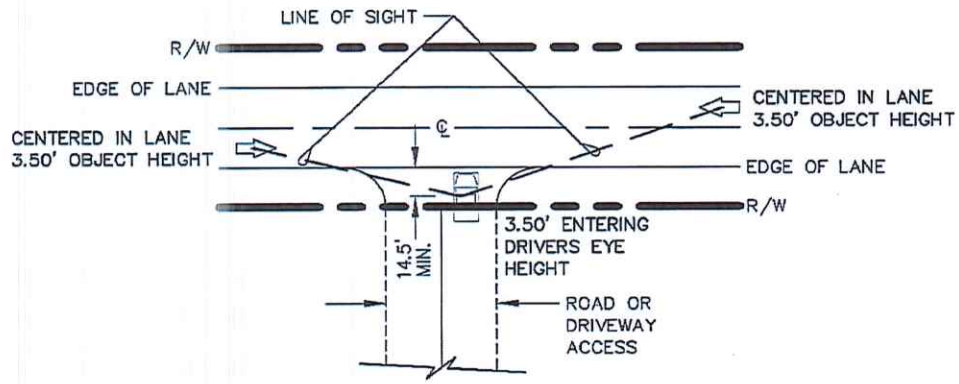

SIGHT DISTANCE DETAIL
NTS

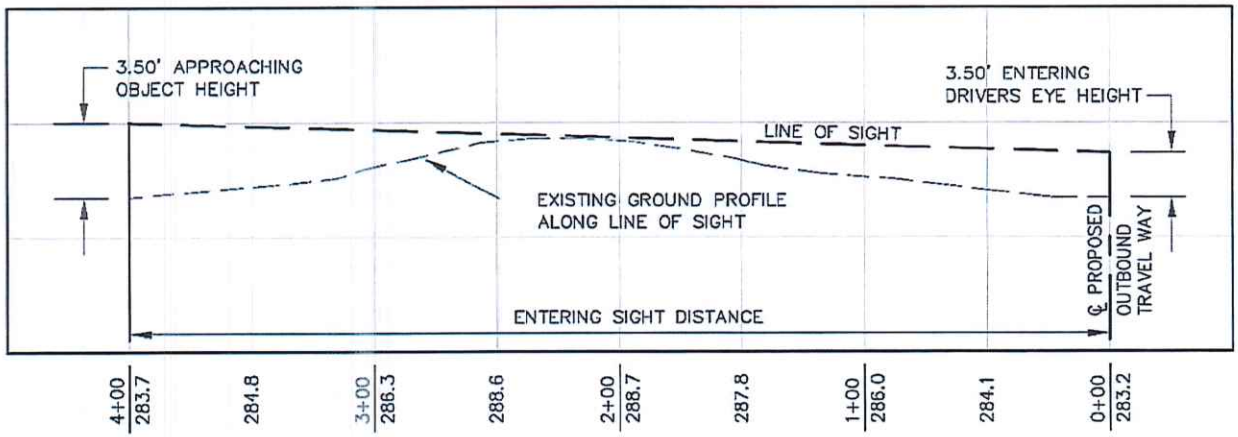

PROFILE EXAMPLE
NTS

MASON COUNTY DEPARTMENT OF PUBLIC WORKS	STANDARD DETAIL	
	EXAMPLE DEPARTURE SIGHT DISTANCE DIAGRAM	FIG 4–8

Figure 5-1: Standard Detail - Type ST-2 Sign Support

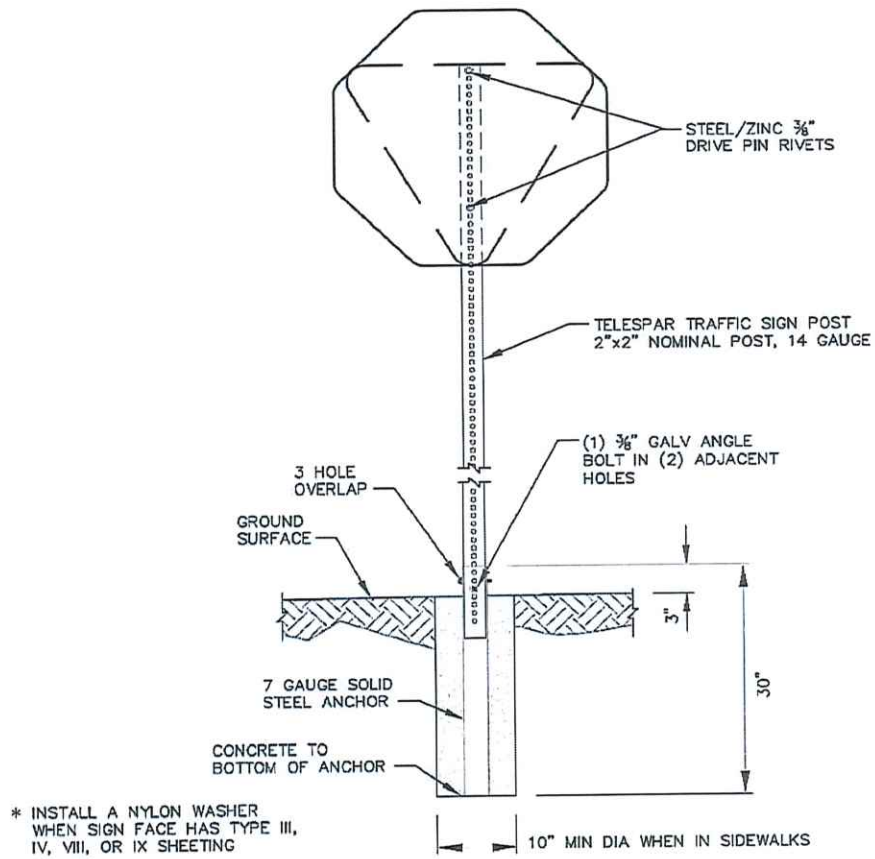

MASON COUNTY DEPARTMENT OF PUBLIC WORKS	**STANDARD DETAIL**	
	TYPE ST–2 SIGN SUPPORT	FIG 5–1

Figure 5-2: Standard Detail - Typical Thermoplastic Crosswalk Pavement Markings

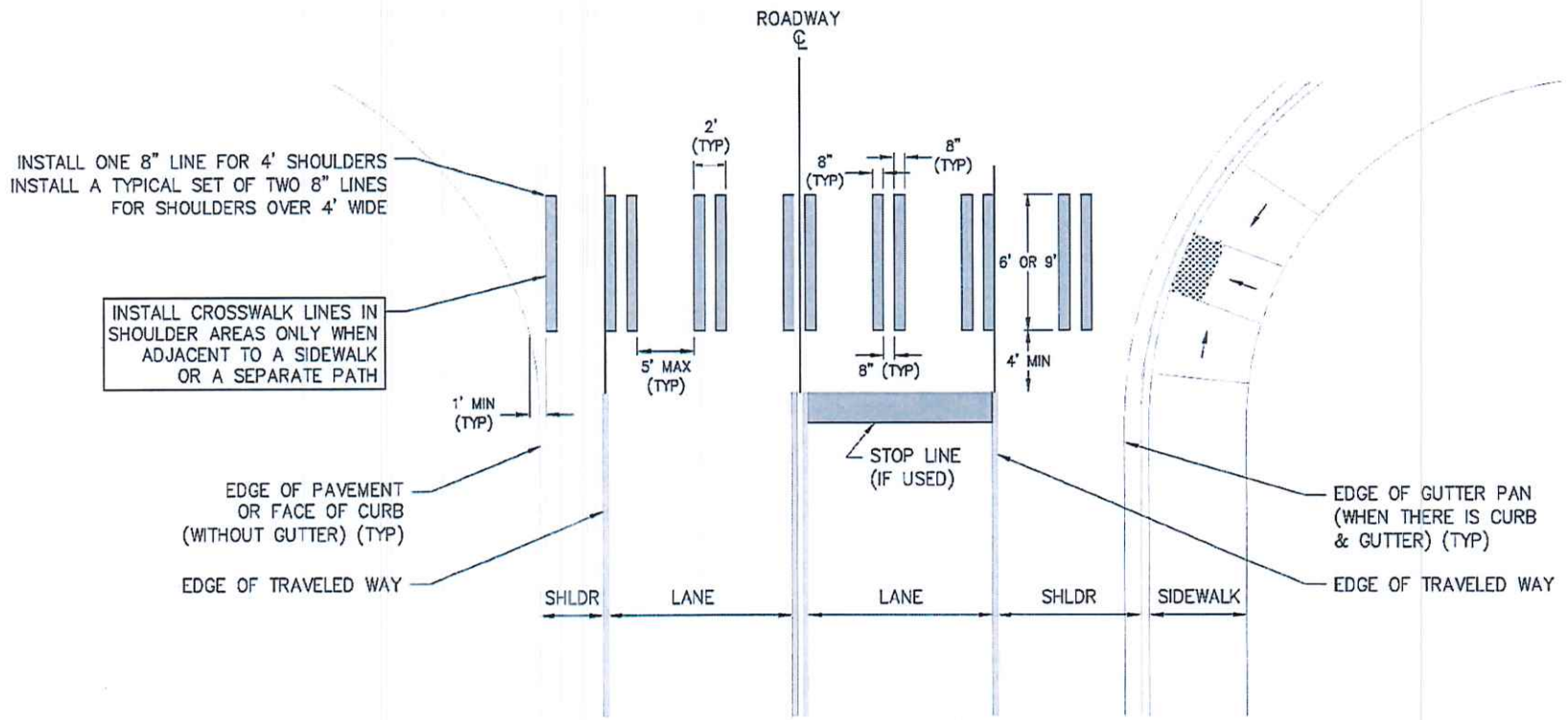

GENERAL NOTES

1. LOCATE CROSSWALK LINES OUTSIDE OF AND PARALLEL TO THE WHEEL PATHS.
2. INSTALL 6' CROSSWALK LINES FOR CONTROLLED CONDITION AND 9' CROSSWALK LINES FOR UNCONTROLLED CONDITION.
3. FOR SKEWED CROSSWALKS, CONSIDER INSTALLING 9' CROSSWALK LINES BASED ON ENGINEERING JUDGEMENT.

MASON COUNTY DEPARTMENT OF PUBLIC WORKS	STANDARD DETAIL	
	TYPICAL THERMOPLASTIC CROSSWALK PAVEMENT MARKINGS	FIG 5–2

Figure 7-1: Standard Detail - Standard Trench and Pavement Restoration

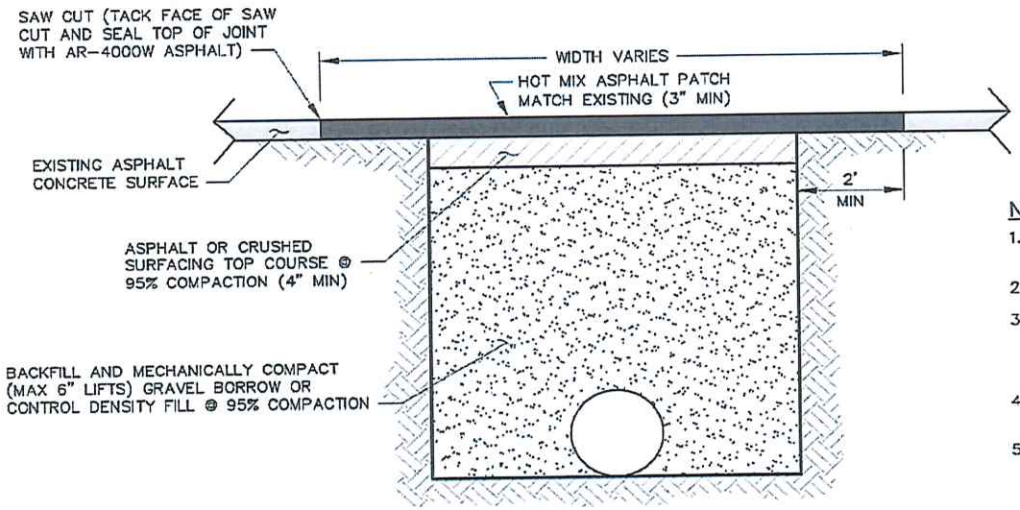

NOTES

1. ALL UTILITIES SHALL HAVE 36" MIN COVER UNLESS OTHERWISE APPROVED BY THE COUNTY ENGINEER
2. ROADWAY PUSHES & BORES SHALL HAVE 48" MIN COVER
3. IF ROAD CLOSURES OR DETOURS ARE ANTICIPATED, A TRAFFIC PLAN INCLUDING SPECIFIC DATES AND DURATIONS OF SUCH ACTIONS SHALL BE FILED WITH THE DEPARTMENT OF PUBLIC WORKS PER SECTION 8.2.2
4. THE APPLICANT IS RESPONSIBLE FOR ALL TEMPORARY AND PERMANENT PATCHING
5. NO OPEN TRENCHES LEFT OVERNIGHT

MASON COUNTY DEPARTMENT OF PUBLIC WORKS	STANDARD DETAIL	
	STANDARD TRENCH AND PAVEMENT RESTORATION	FIG 7-1

Figure 8-1: Standard Detail - Cased and Surface Road Monuments

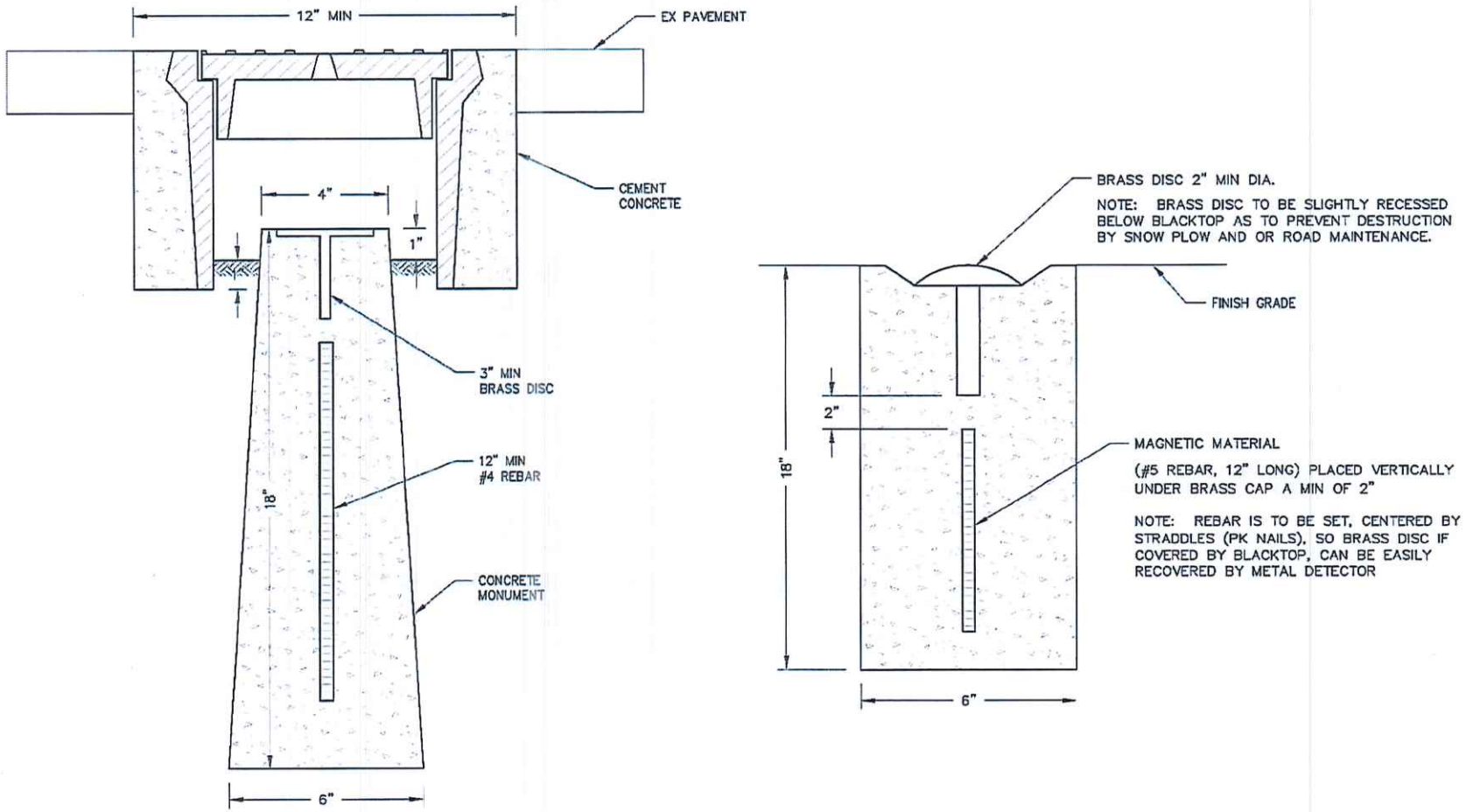

MASON COUNTY DEPARTMENT OF PUBLIC WORKS	STANDARD DETAIL	
	CASED AND SURFACE ROAD MONUMENTS	FIG 8–1

– Urban Major Approach – Planter Strip. Grading and restoration beyond the end of the road approach shall be done to provide a smooth, passable, and safe transition.

Access to the abutting property shall be controlled along the access centerline from the county right of way or easement into the property for 50 feet minimum.

New road approaches that would create a four-legged intersection are desirable.

4.3.3 Construction Criteria

All approaches shall be paved to the right of way line or 3 feet beyond the end of the radius, whichever is greater, with a minimum of 3-inch compacted depth of Hot Mix Asphalt (HMA) over minimum 2-inch compacted depth crushed surfacing top course, or minimum 6-inches of reinforced Portland Cement concrete. If an existing County maintained road is gravel, an approach constructed of 4-inch compacted depth crushed surfacing top course is acceptable.

All approaches to County roads shall not exceed plus or minus 2% for 10 feet.

Wherever possible, the outer edge of an approach shall not be constructed closer than 70 feet to a bridge, culvert, or other structure that may warrant end protection using barriers or guardrail.

4.3.4 Temporary Road Approach

A temporary road approach shall be constructed in accordance with the residential road approach requirements except paving.

Grading and restoration beyond the end of the road approach shall be done to provide a smooth, passable, and safe transition to the existing facility. Temporary road approaches should preserve native vegetation to the extent feasible and avoid existing trees.

No site work may commence until a permit for the temporary road approach has been issued and the temporary approach constructed. All temporary road approaches shall be removed, and the right of way restored within 180 days from the date of approval. One extension of this permit time may be granted for a period not to exceed an additional 180 days.

4.3.5 Failure to Construct Properly

In addition to all other enforcement remedies, any person, firm, partnership, association, joint venture, corporation or other entity who fails to construct an approach properly shall be required to compensate the County for the improvement or removal of the approach. Compensation shall include administration time as well as equipment and materials to remove or improve the approach. Reimbursement shall be made to the Mason County Department of Public Works.